Door Window Glass Adjustment - Coupe

Adjustment

NOTE: *LH side shown, RH side similar.*

NOTE: *Removal steps in this procedure may contain installation details.*

All adjustments

1. **NOTE:** *This step is only necessary when the door has been removed or replaced.*

   NOTE: *The front door must be aligned correctly before adjusting the front door window glass.*

Check the front door alignment.
Refer to: **Front Door Alignment** (501-03 Body Closures, General Procedures).

2. Open the door.

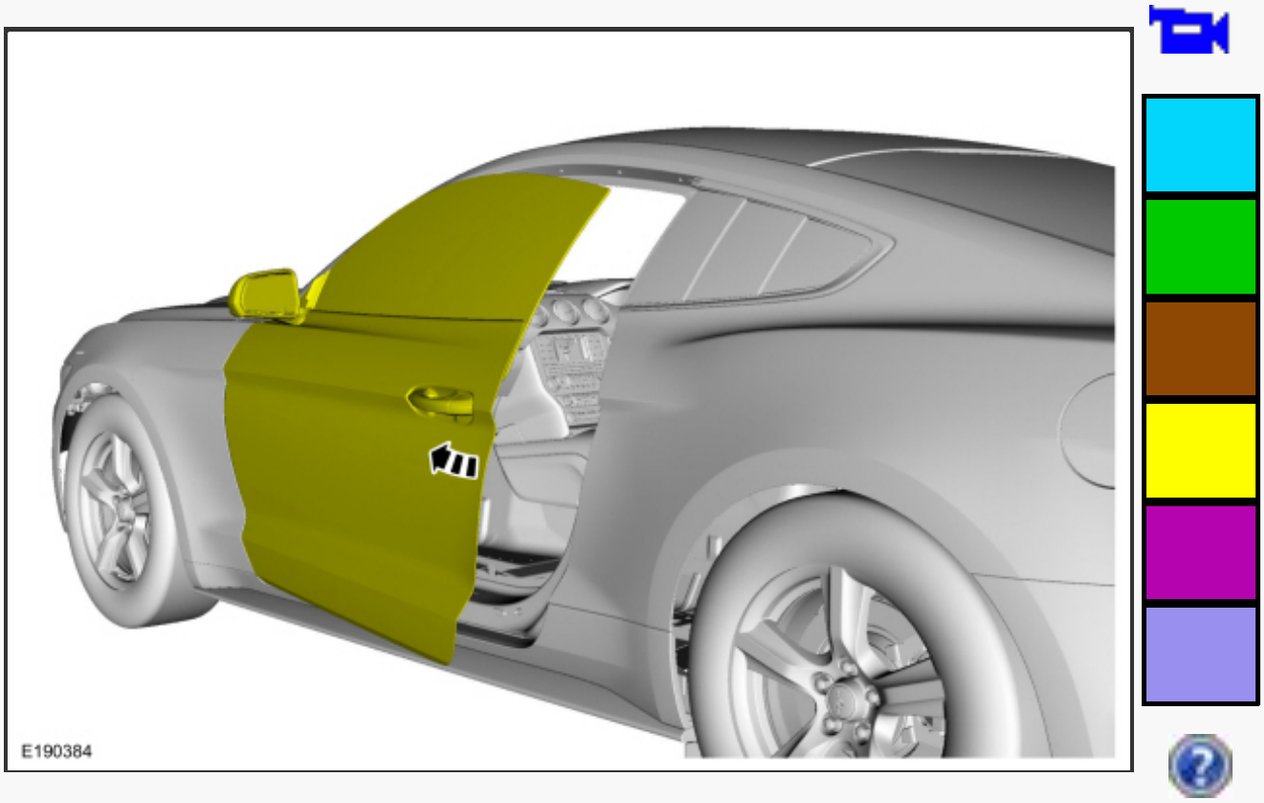

3. Remove the front door speaker.
Refer to: **Front Door Speaker RH** (415-00B Information and Entertainment System - General Information - Vehicles With: Touchscreen Display, Removal and Installation).
Refer to: **Front Door Speaker LH** (415-00A Information and Entertainment System - General Information - Vehicles With: AM/FM/CD/SYNC, Removal and Installation).

4. Remove the bolts and position aside the DDM.

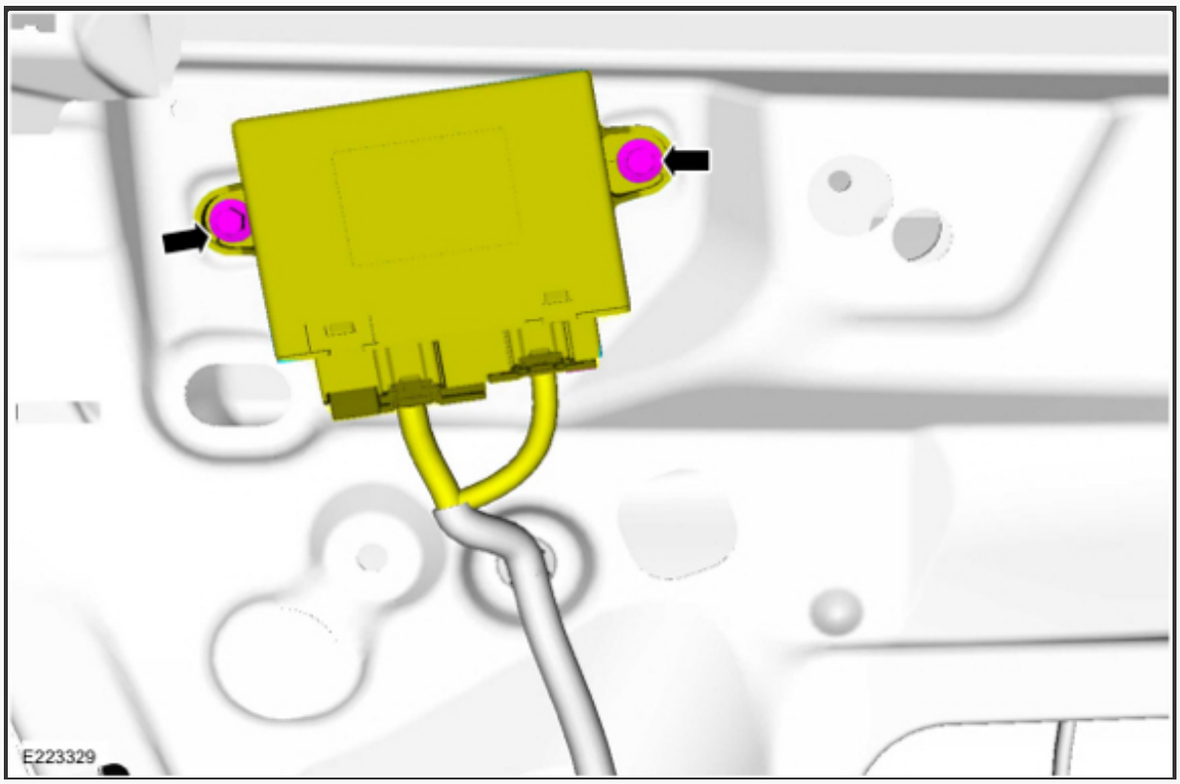

5. Remove the grommets and the adhesive tapes.

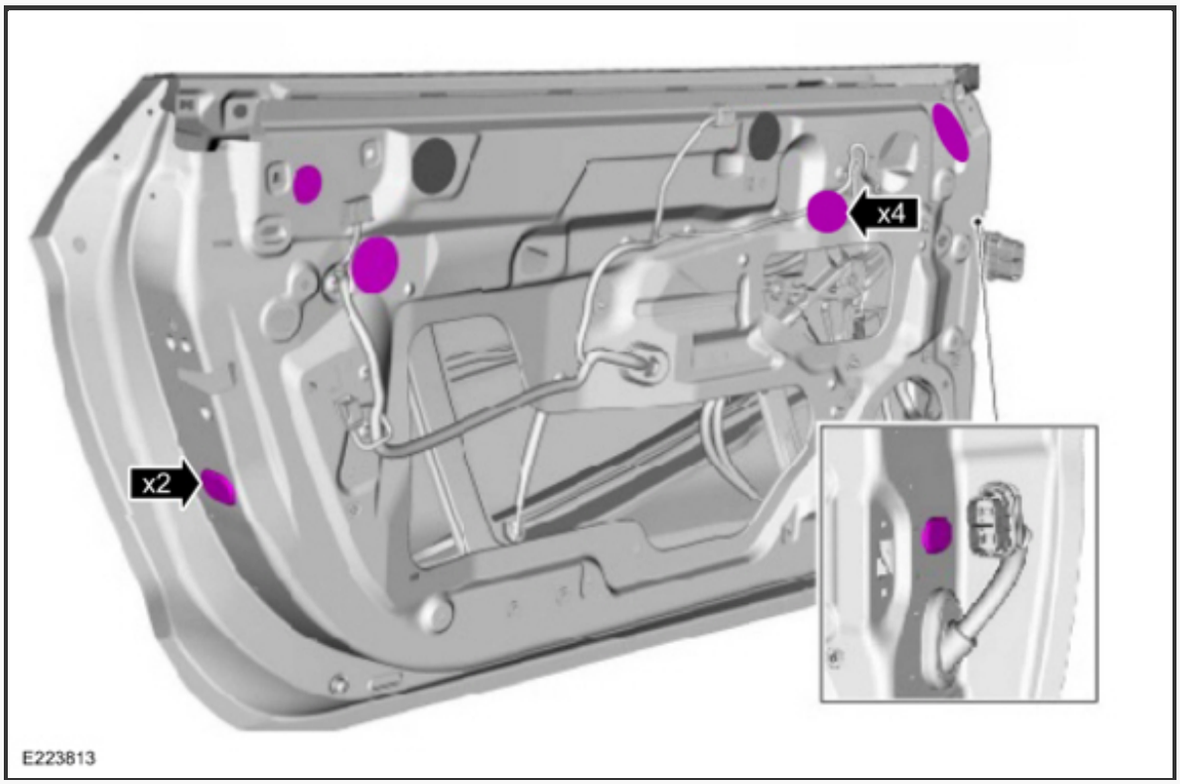

6. Remove the front door lower watershield.

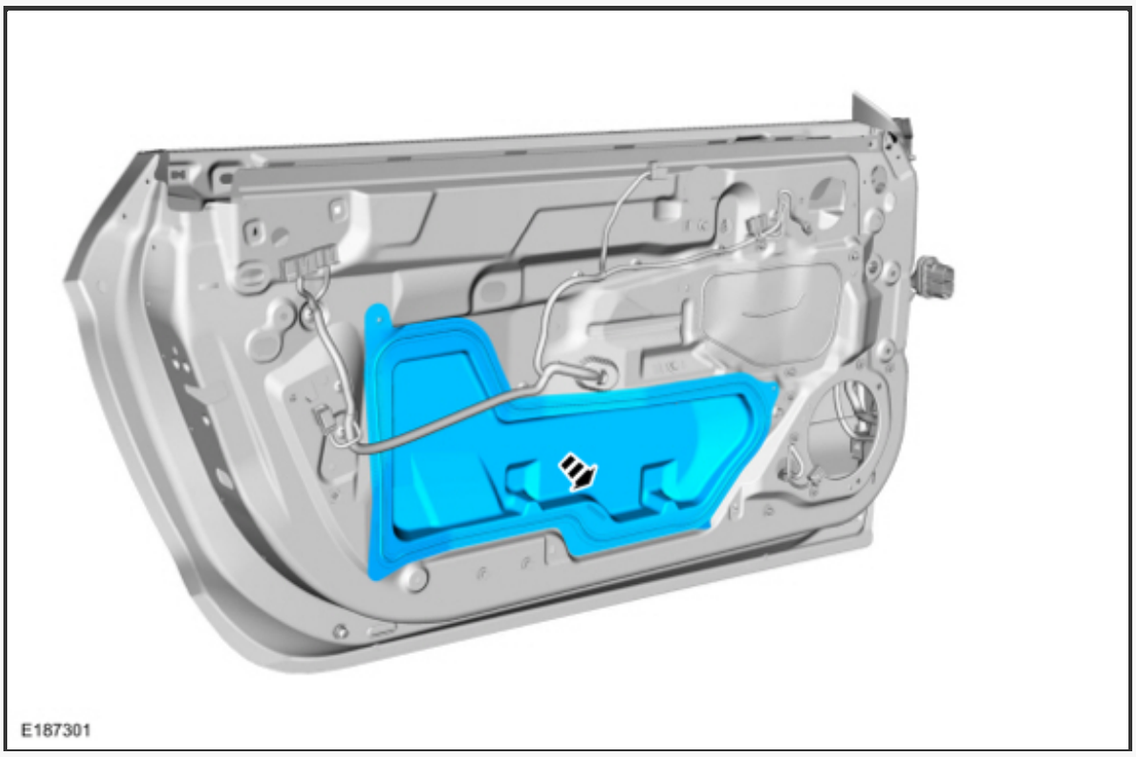

7. Raise the front door window glass to the full up position.
    1. Install the front door window control switch.
    2. Raise the front door window glass to the full up position.

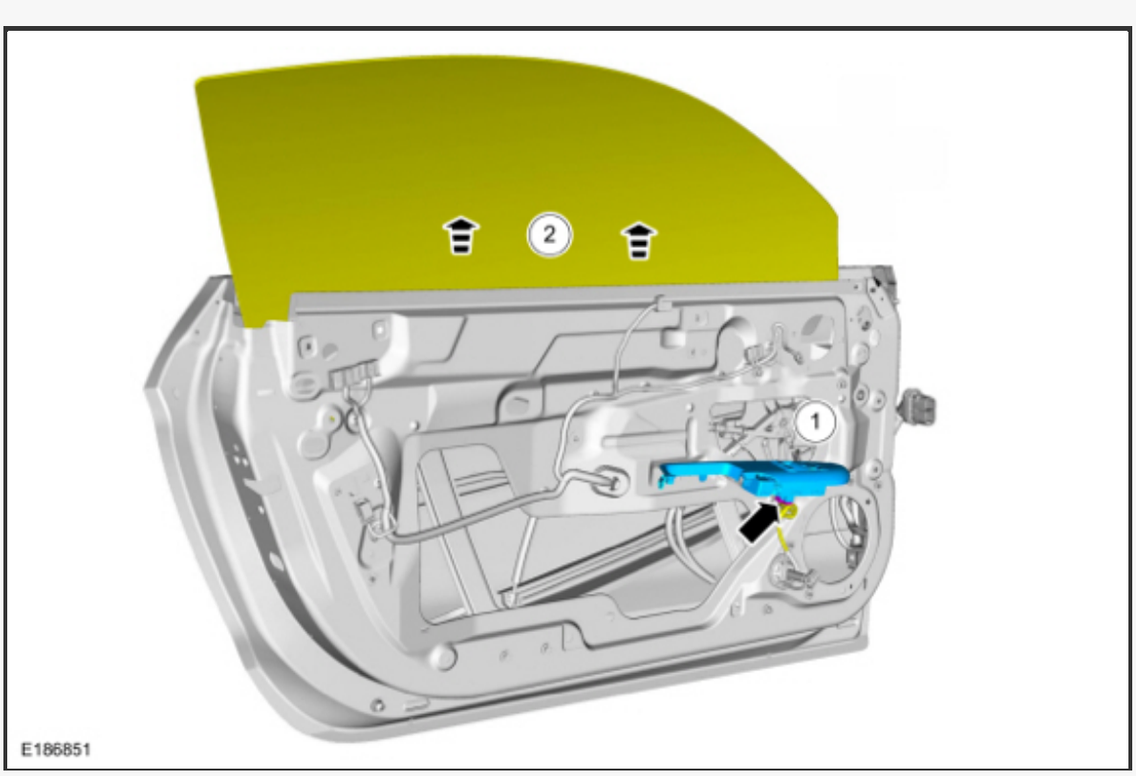

8. Close the door.

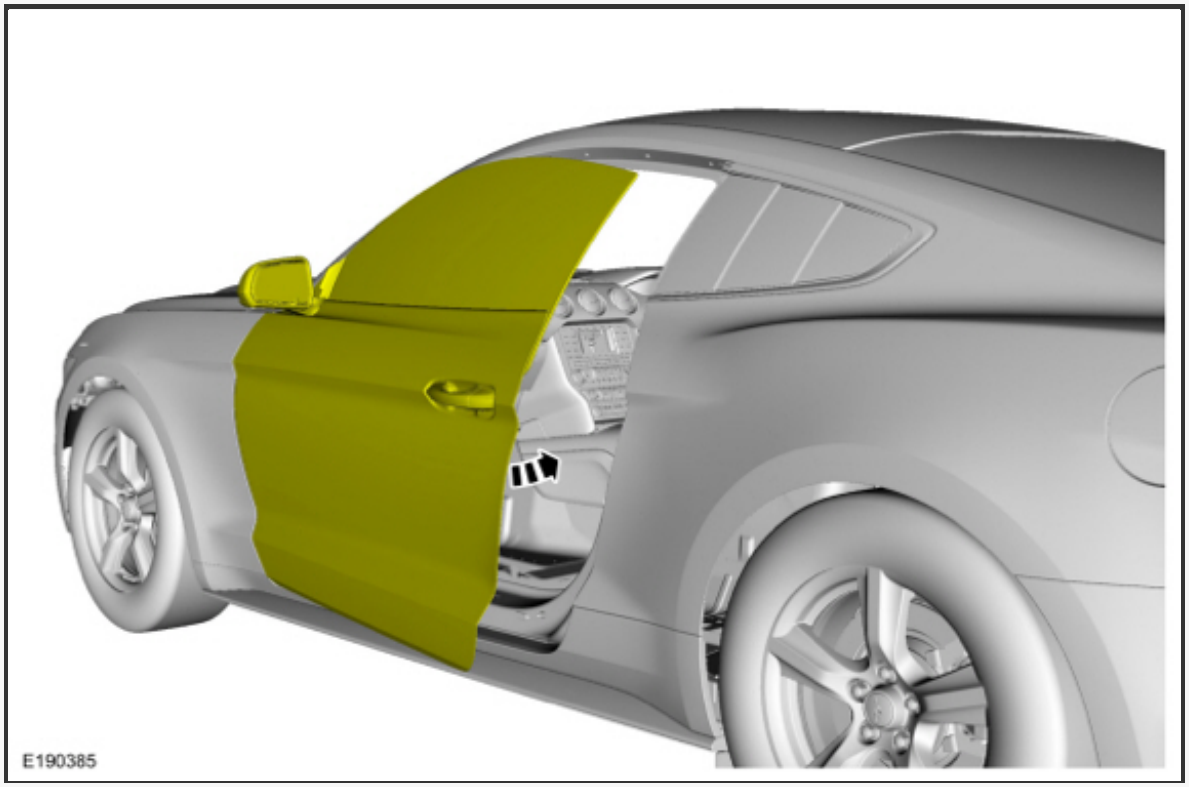

Up/Down, Fore/Aft adjustment

9. Apply tape to top of the front door glass at the specified locations.
    1. Apply tape on front door window glass at the A-pillar 245mm from the base of the outer belt moulding.
    2. Apply tape on front door window glass from the rear of front door window glass near the roof line 230mm forward.

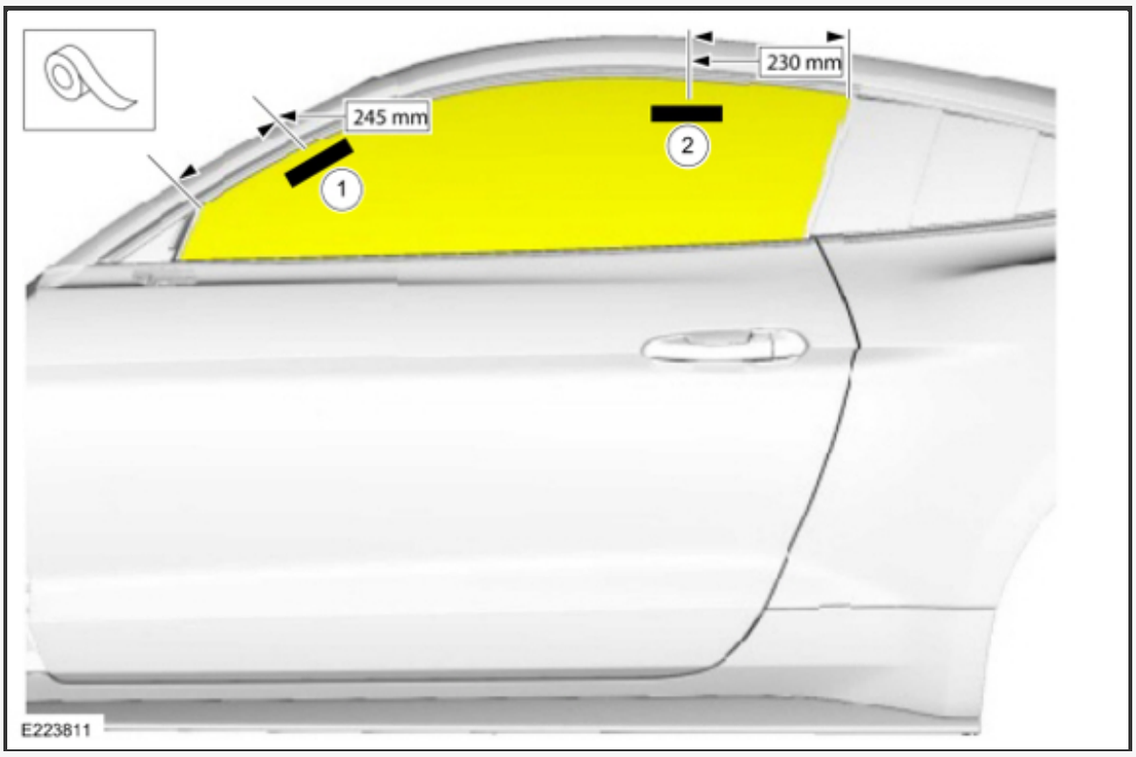

10. Open the door.

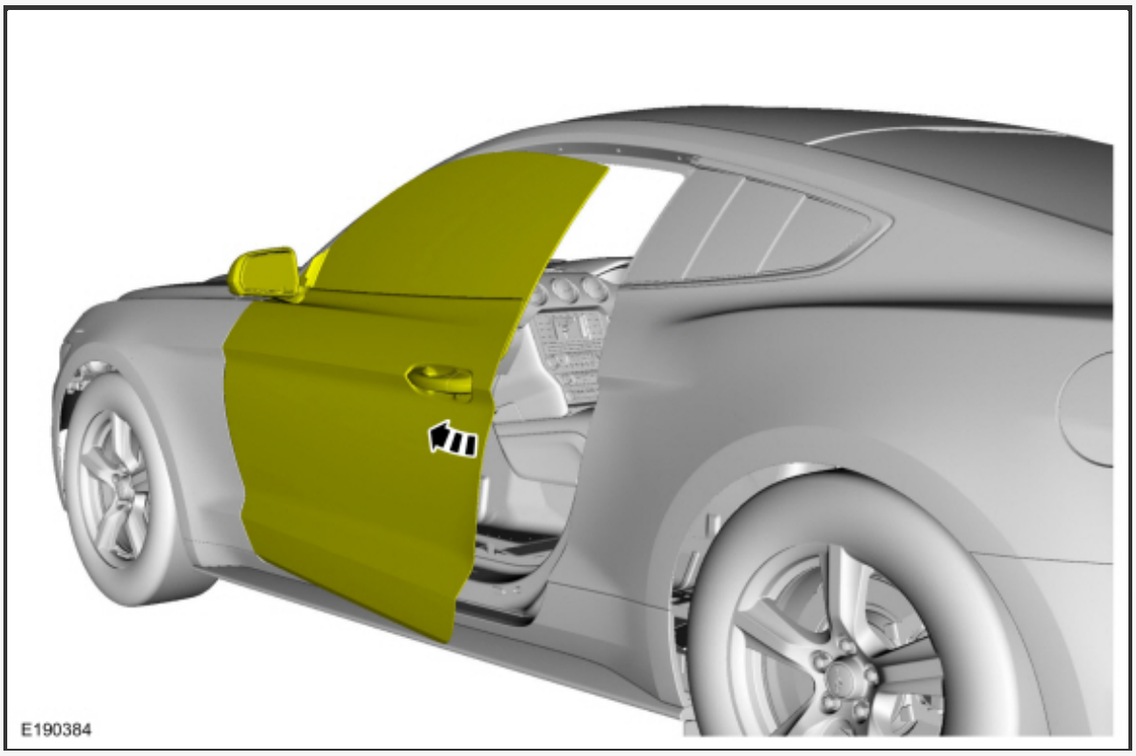

11. Measure the distance of the tape at both locations to the top edge of the front door glass at the specified locations.
    1. Measure front door window glass at the A-

pillar 245mm from the base of the outer belt moulding and record.

2. Measure at the rear of front door window glass near the roof line 230mm forward and record.

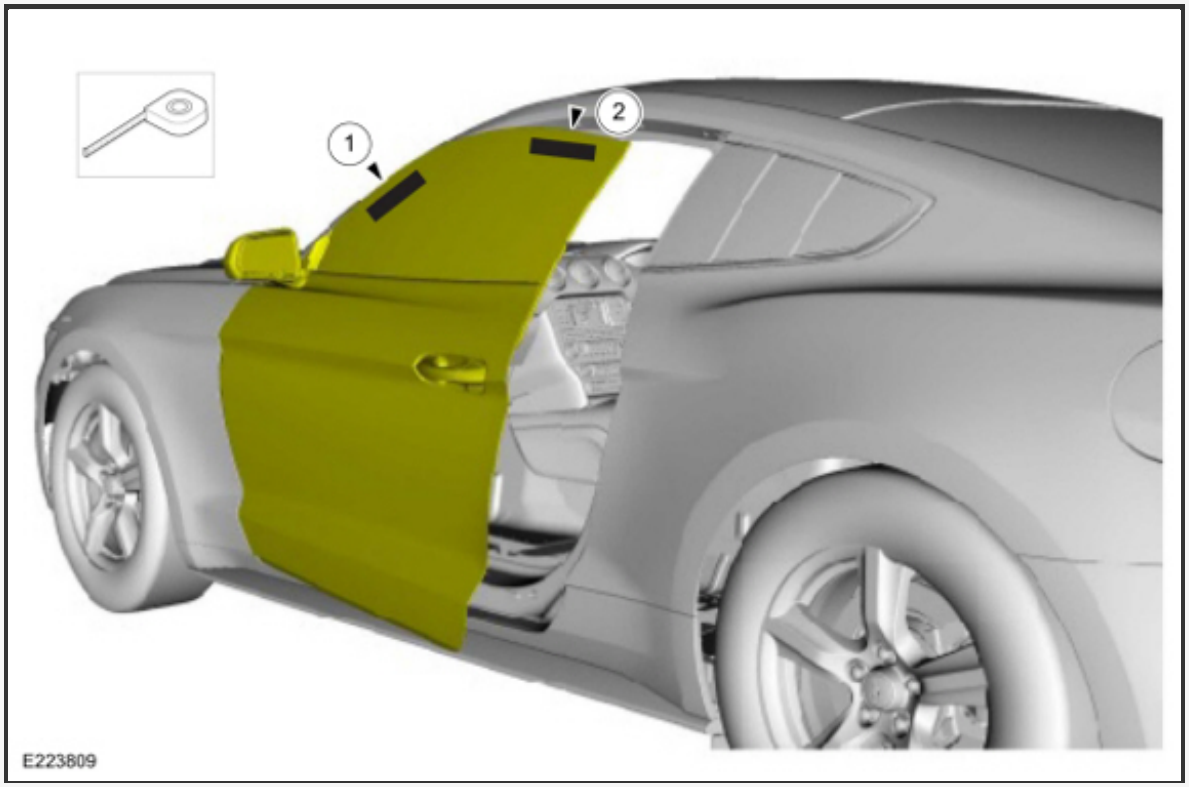

12. Close the door.

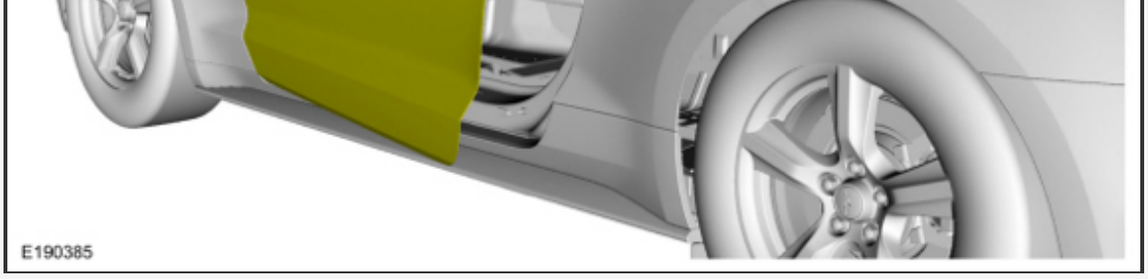

13. Measure the distance of the tape at both locations to the outer bottom edge of the seal retainer at the specified locations.
    1. Measure front door window glass at the A-pillar 245mm from the base of the outer belt moulding and record.
    2. Measure front door window glass at the rear of front door glass near the roof line 230mm forward and record.

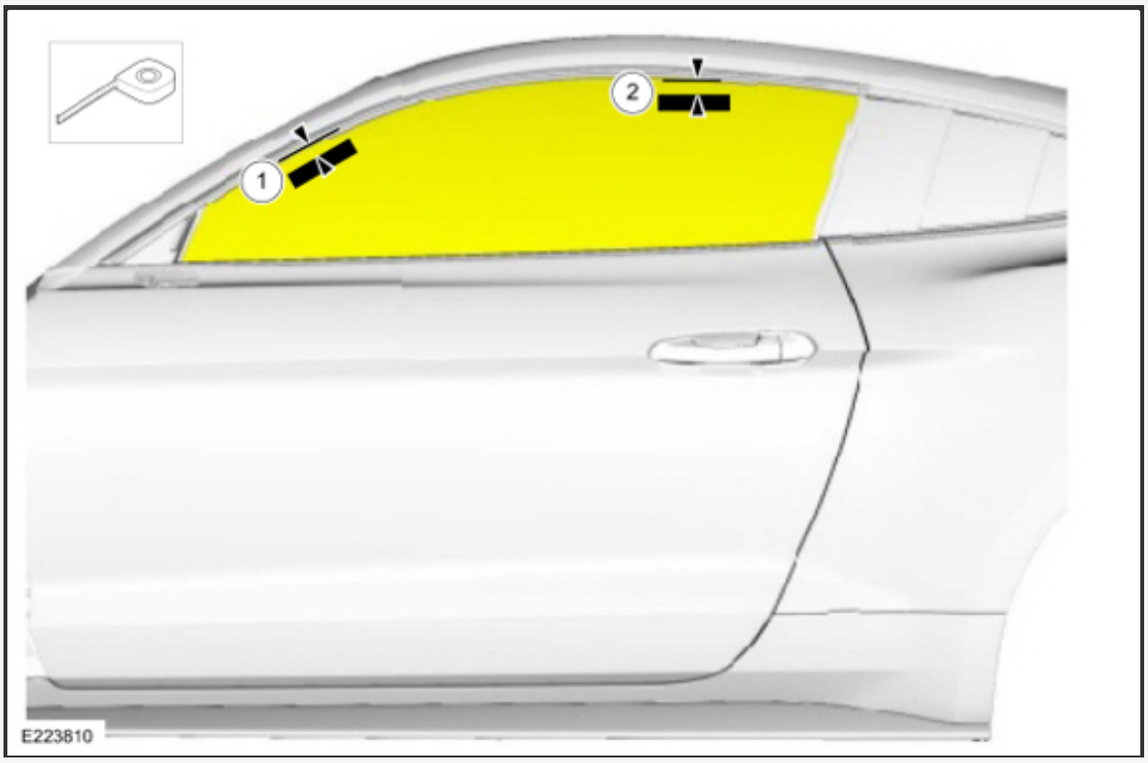

14. Subtract the distance of the tape at both locations from the previously recorded

measurements.

1. Front door window glass engagement measurement range at the A-pillar 245mm from the base of the outer belt moulding range is 4mm +/-2mm.
2. Front door window glass engagement measurement range at rear of front door glass near the roof line 230mm forward range is 8mm +/-2.5mm.

15. Open the door.

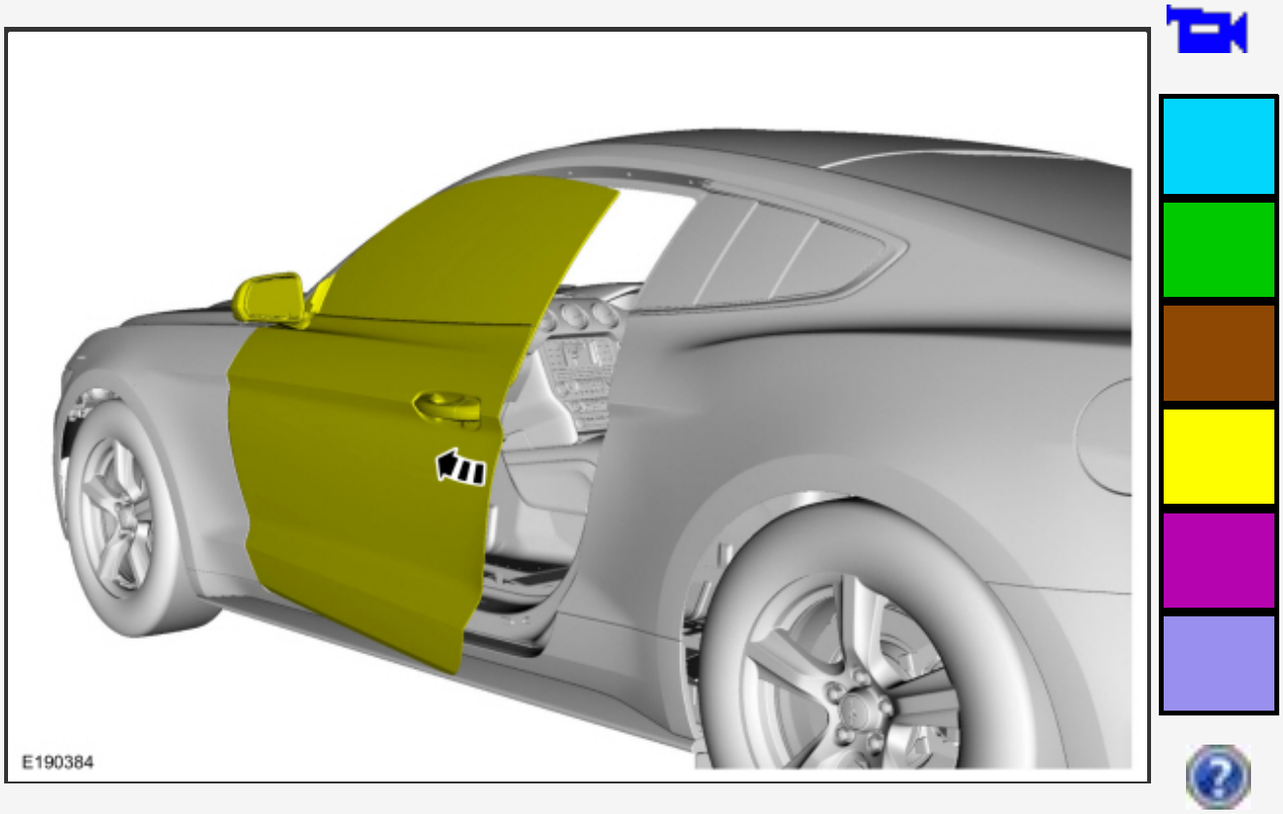

16. Loosen both glass clamps, adjust the front door window glass as necessary and tighten the glass clamps.
    Torque: 80 lb.in (9 Nm)

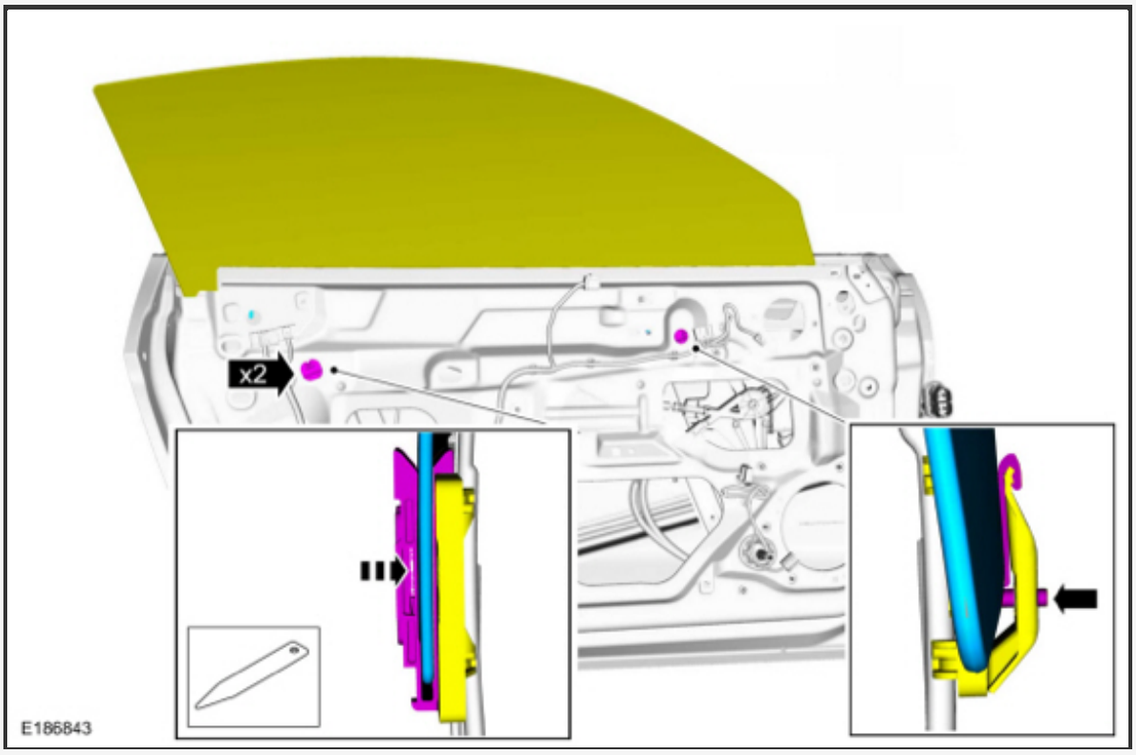

17. Close the door.

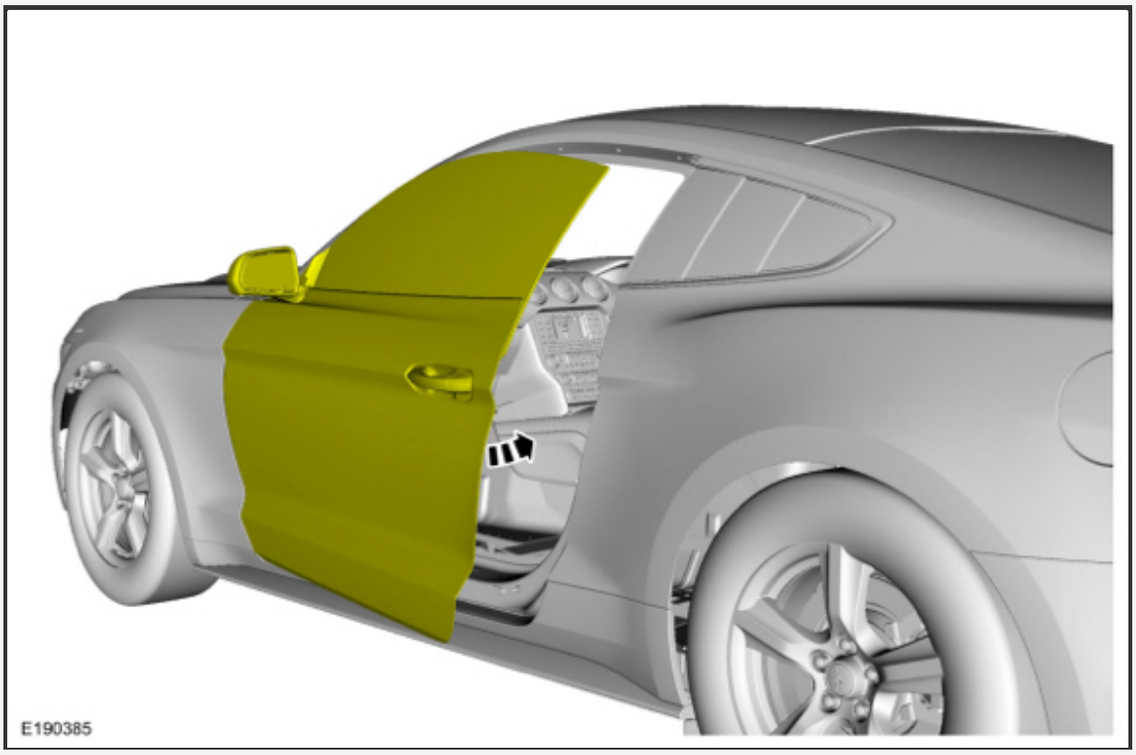

18. Measure the distance of the tape at both locations to the outer bottom edge of the seal retainer at the specified locations.
    1. Measure at A-pillar 245mm from the base of the outer belt moulding and record.

2. Measure at rear of front door glass near the roof line 230mm forward and record.

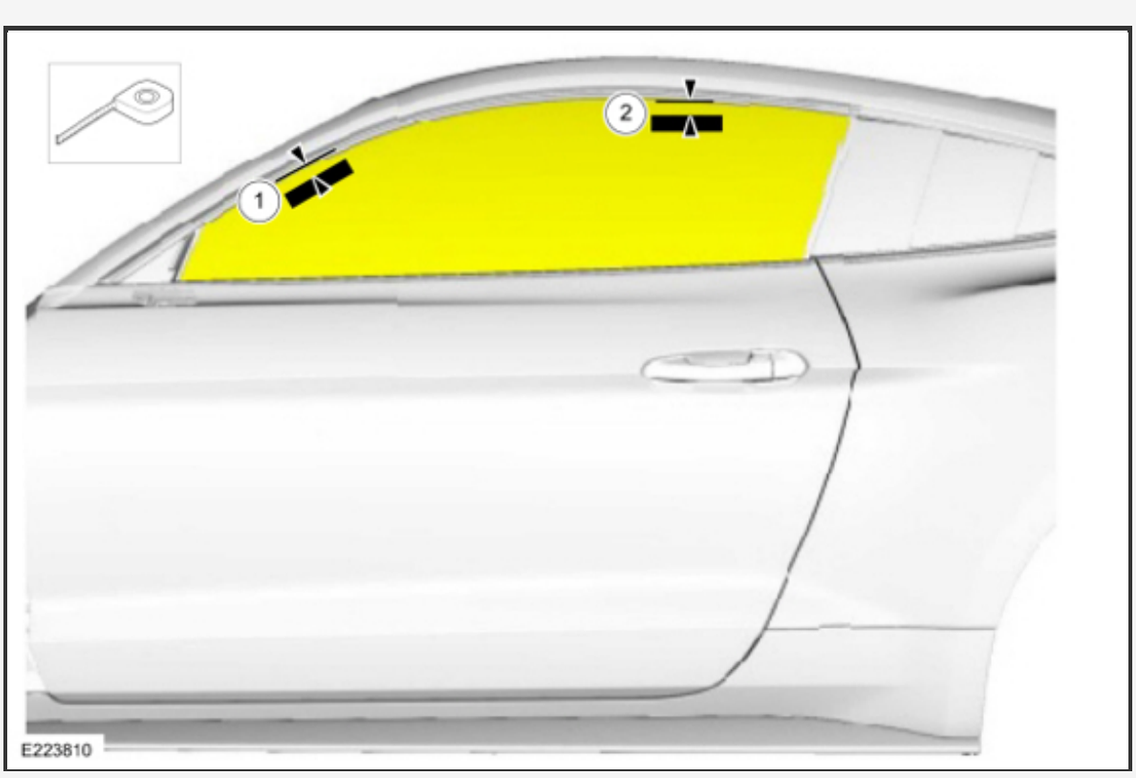

19. **NOTE:** *Repeat steps 15 through 19 until the front door window glass within specification.*

    Subtract the distance of the tape at both locations from the previously recorded measurements.

    1. Measurement range at A-pillar 245mm from the base of the outer belt moulding range is 4mm +/-2mm.
    2. Measurement range at rear of front door glass near the roof line 230mm forward range is 8mm +/-2.5mm.

20. Measure the gap between the front door

window glass edge and the rear quarter window glass edge should be 9.8mm +/- 1.5mm.

1. Measure at the rear of front door glass 75mm from the base of the outer belt moulding. Record the measurement. The gap between the front door window glass edge and the rear quarter window glass edge should be 9.8mm +/- 1.5mm.
2. Measure at the rear of front door glass 75mm from the top of the front door window glass. Record the measurement. The gap between the front door window glass edge and the rear quarter window glass edge should be 9.8mm +/- 1.5mm.

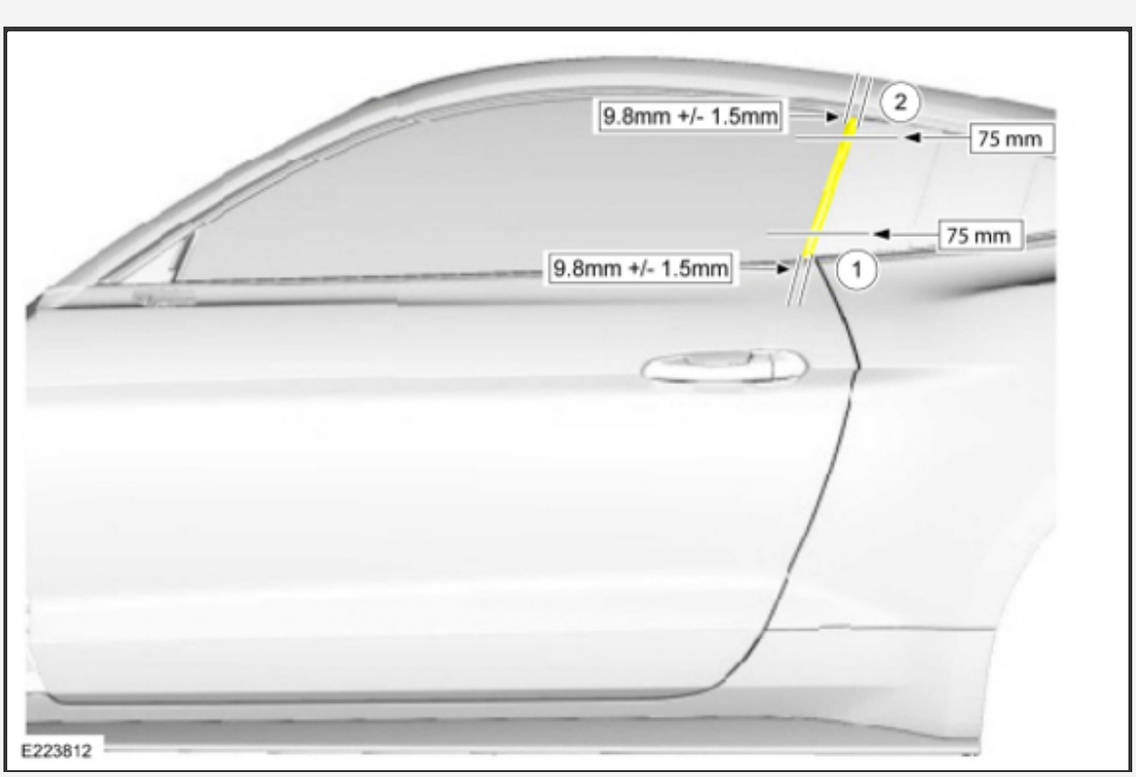

21. **NOTE:** *Repeat steps 15 through 20 until the front door window glass within specification.*

Subtract the measurements recorded in the previous step. The variance between top to bottom of the front door window glass edge to the rear quarter window glass edge should be +/- 1.0mm.

1. If the measurements are not within range or the variance between top to bottom of the front door window glass edge to the rear quarter window glass edge is greater than +/- 1.0mm the front door window glass needs to be adjusted.

In/Out adjustment

22. Close the door.

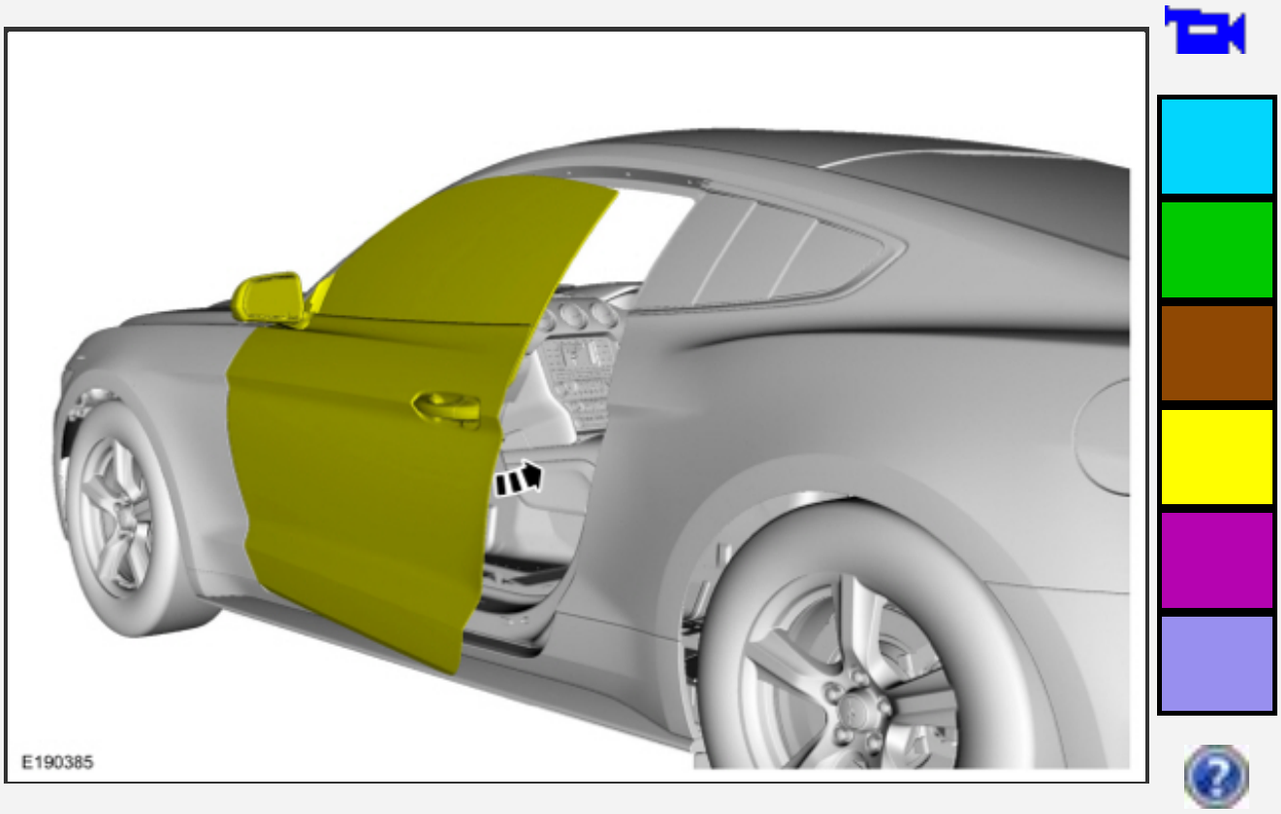

23. Lower and raise the front door window glass

and check the glass engagement into the weatherstrip at the specified locations.

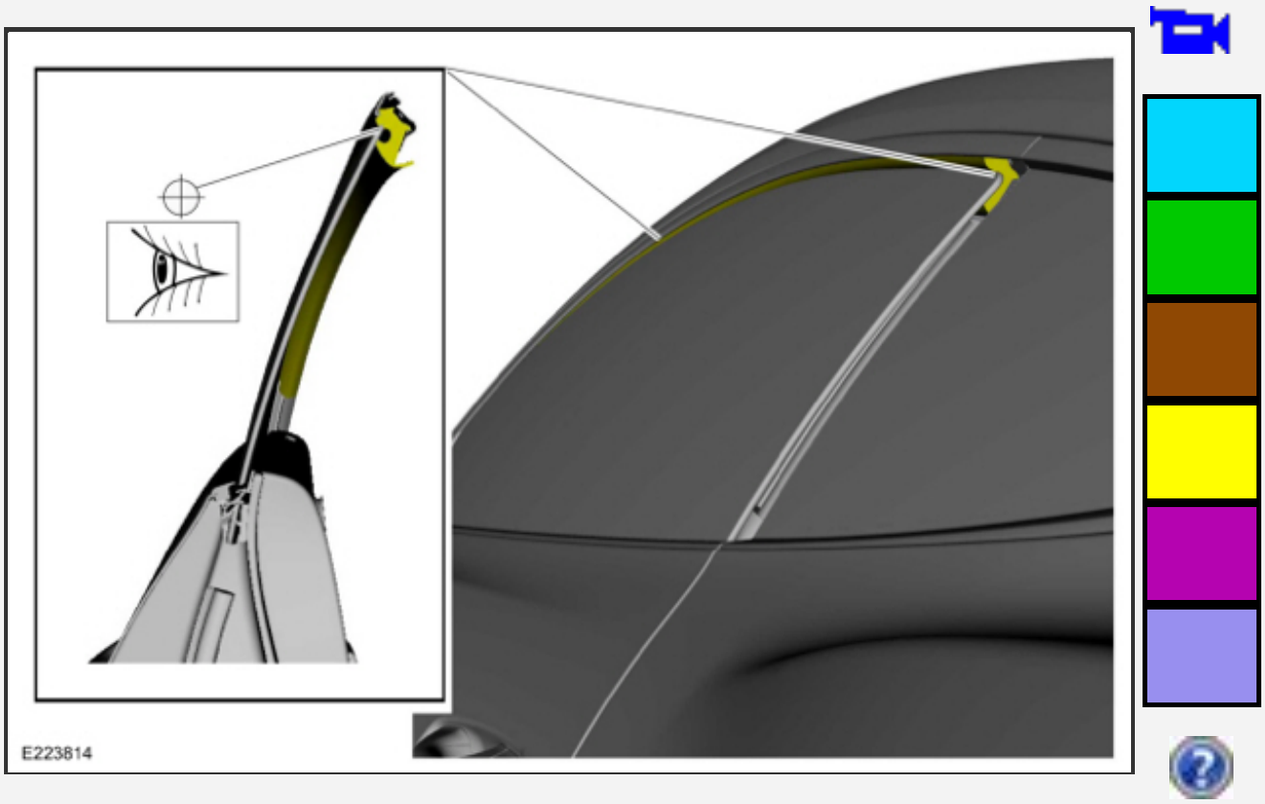

24. Open the door.

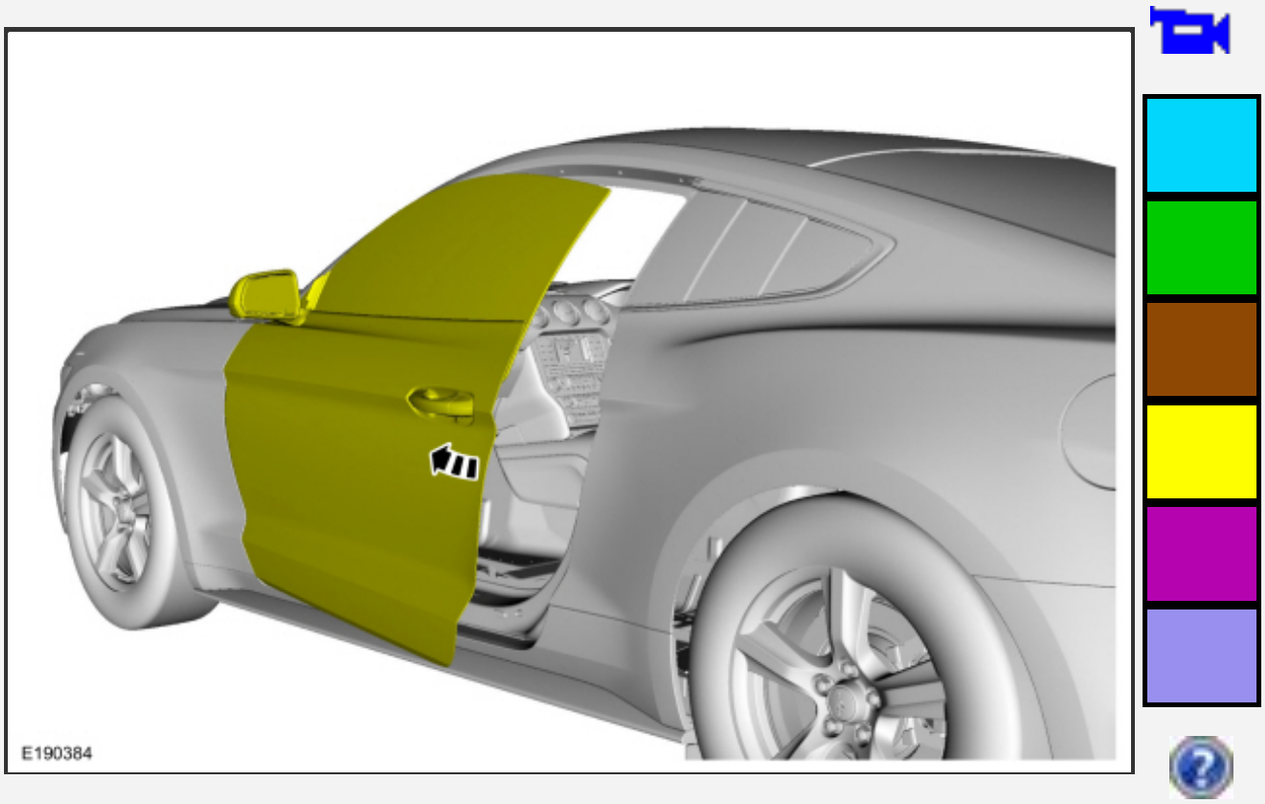

25. Loosen the nuts on the fore and aft front door

glass runs.

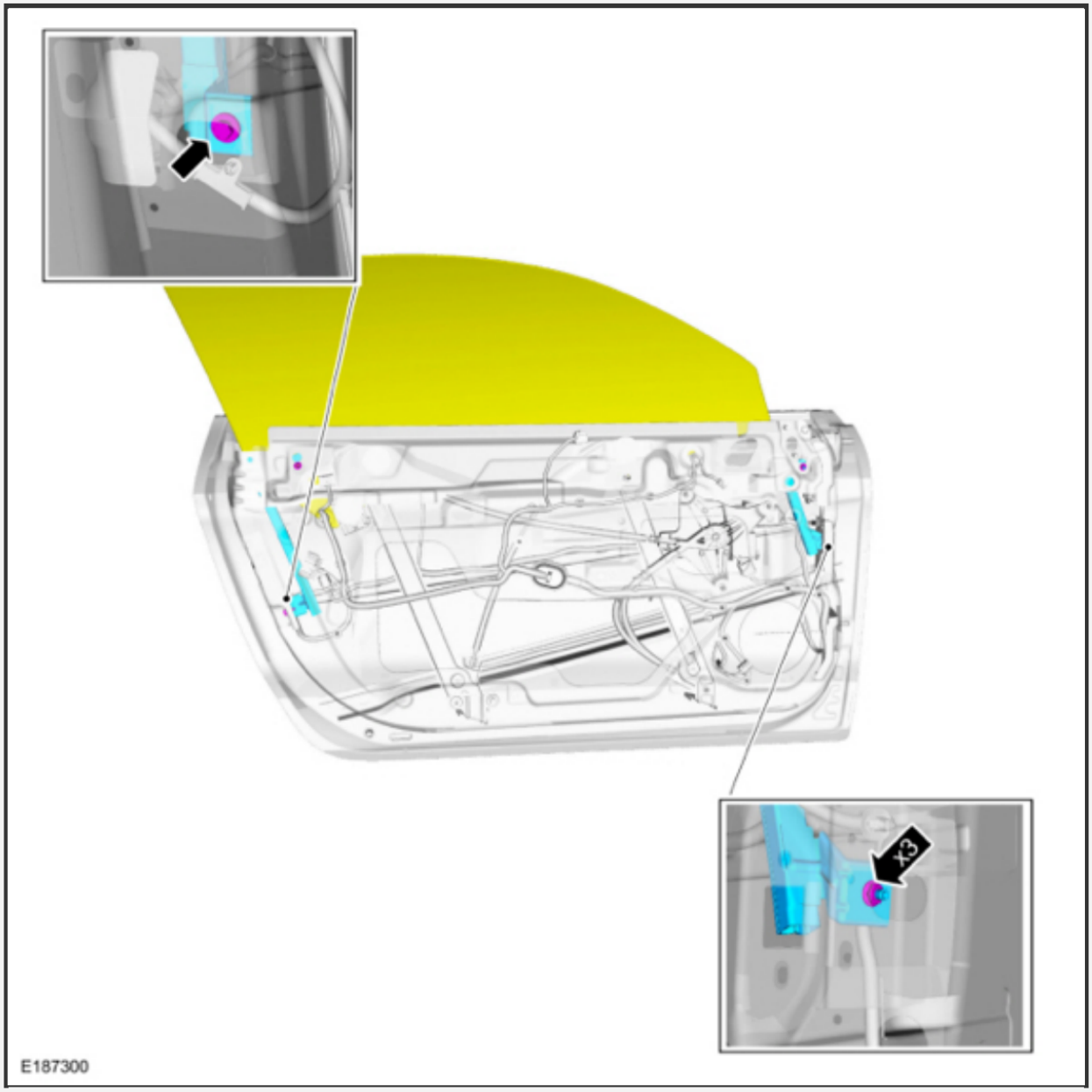

26. Adjust the regulator rails equally in and out to avoid binding.
    1. Loosen the lower window regulator nuts.
    2. Adjust the front and rear regulator rails equally in and out to avoid binding.

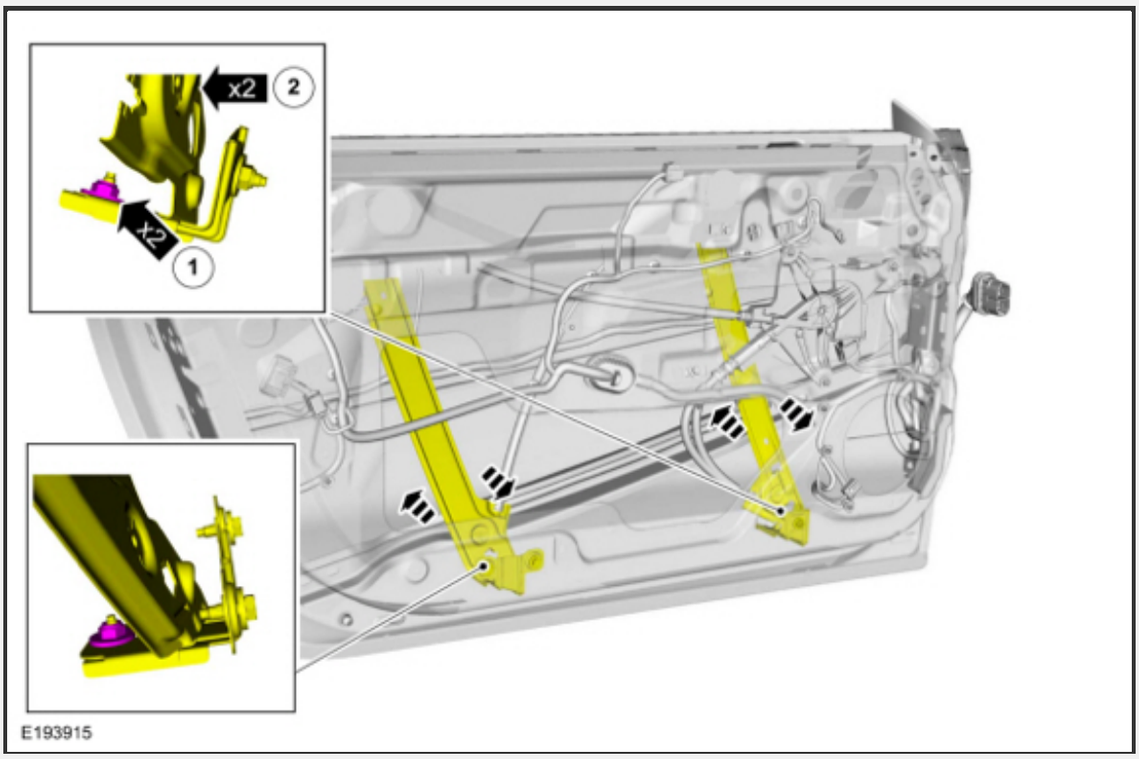

27. Close the door.

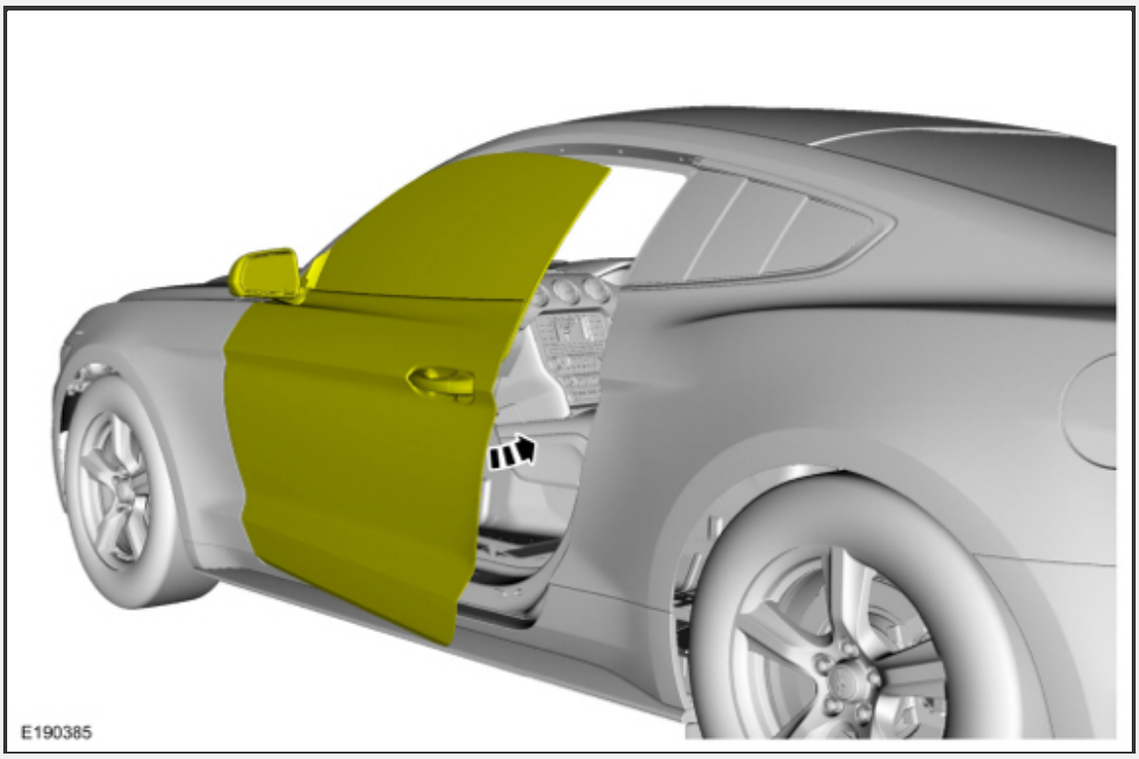

28. **NOTE:** *Repeat steps 24 through 28 until the front door window glass within specification.*

    Lower and raise the front door window glass and check the glass engagement into the weatherstrip at the specified locations.

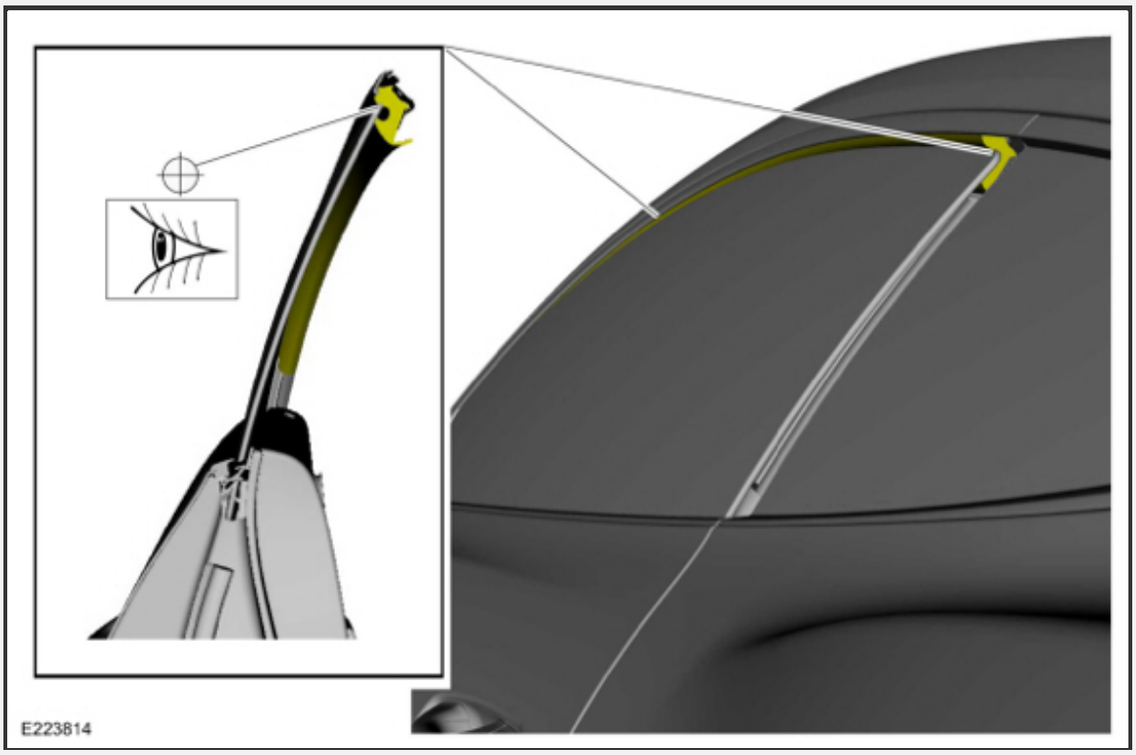

29. Open the door.

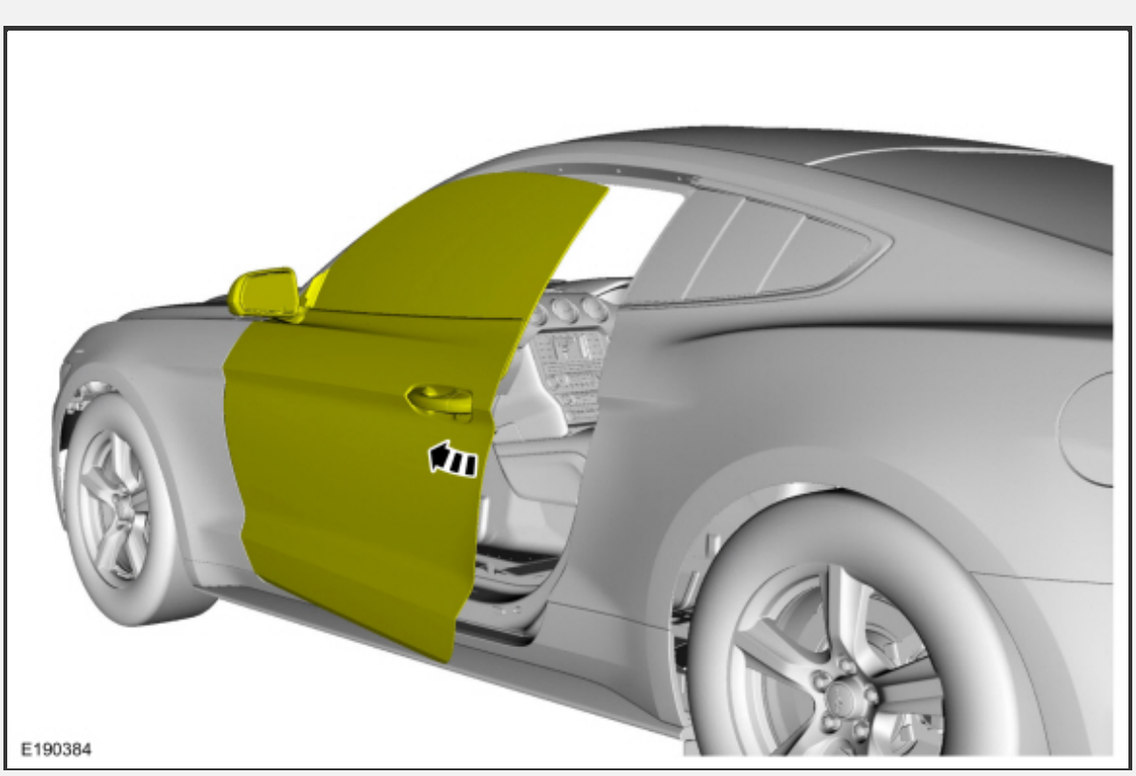

30. Lower the front door window glass.

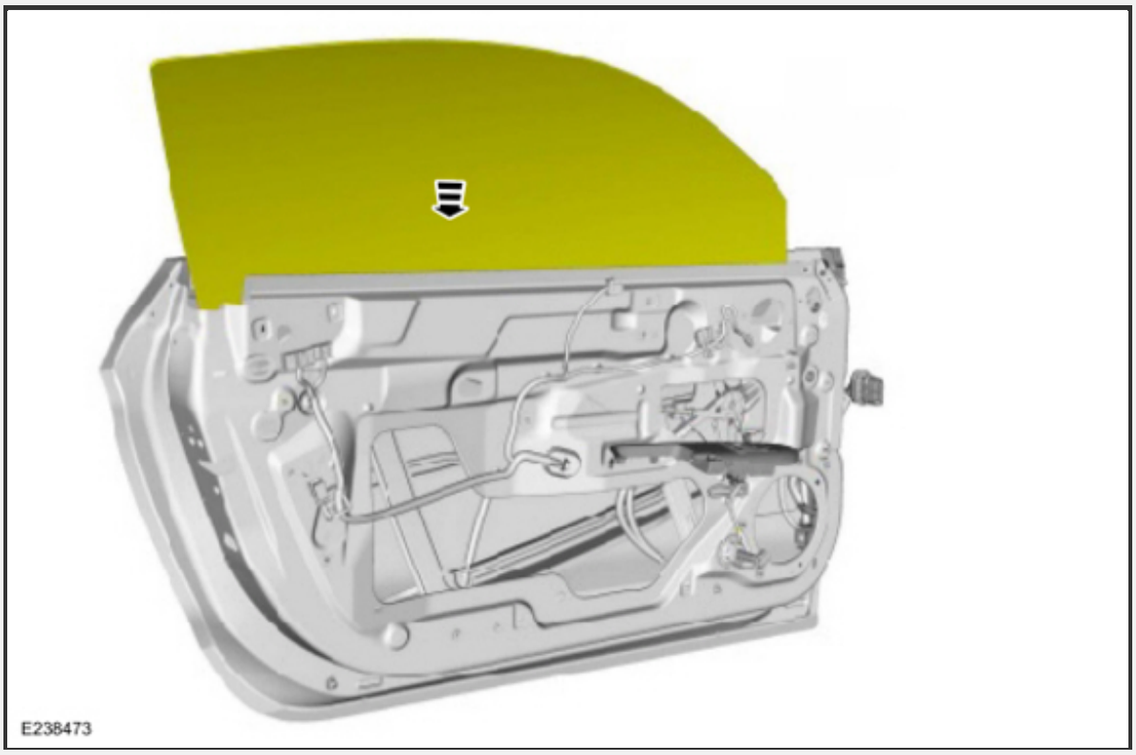

31. **NOTE:** *Take care not to influence the position of the front door glass runs when tightening the nuts.*

    Tighten the front door glass regulator rail nuts.
    Torque: 97 lb.in (11 Nm)

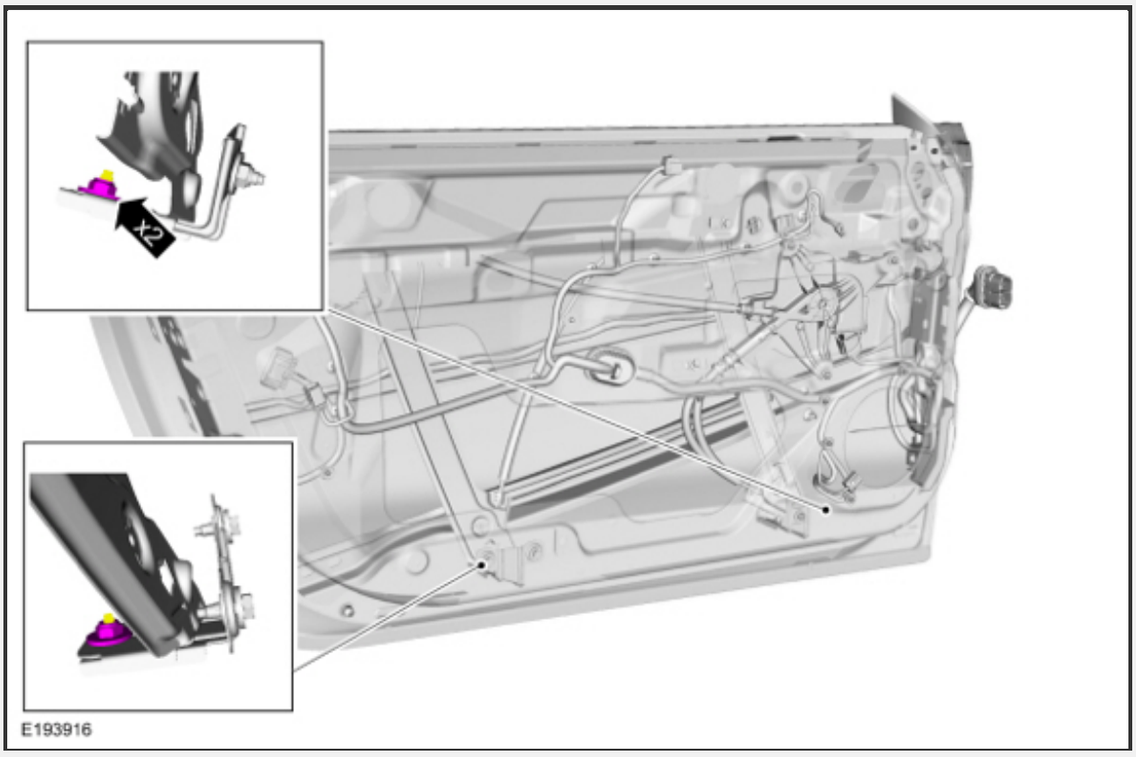

32. **NOTE:** *Take care not to influence the position of the front door glass runs when tightening the nuts.*

Tighten the nuts on the fore and aft front door glass runs.

1. Tighten the lower bolt and nuts on the fore and aft front door glass runs.
   Torque: 97 lb.in (11 Nm)
2. Tighten the upper nuts on the fore and aft front door glass runs.
   Torque: 97 lb.in (11 Nm)

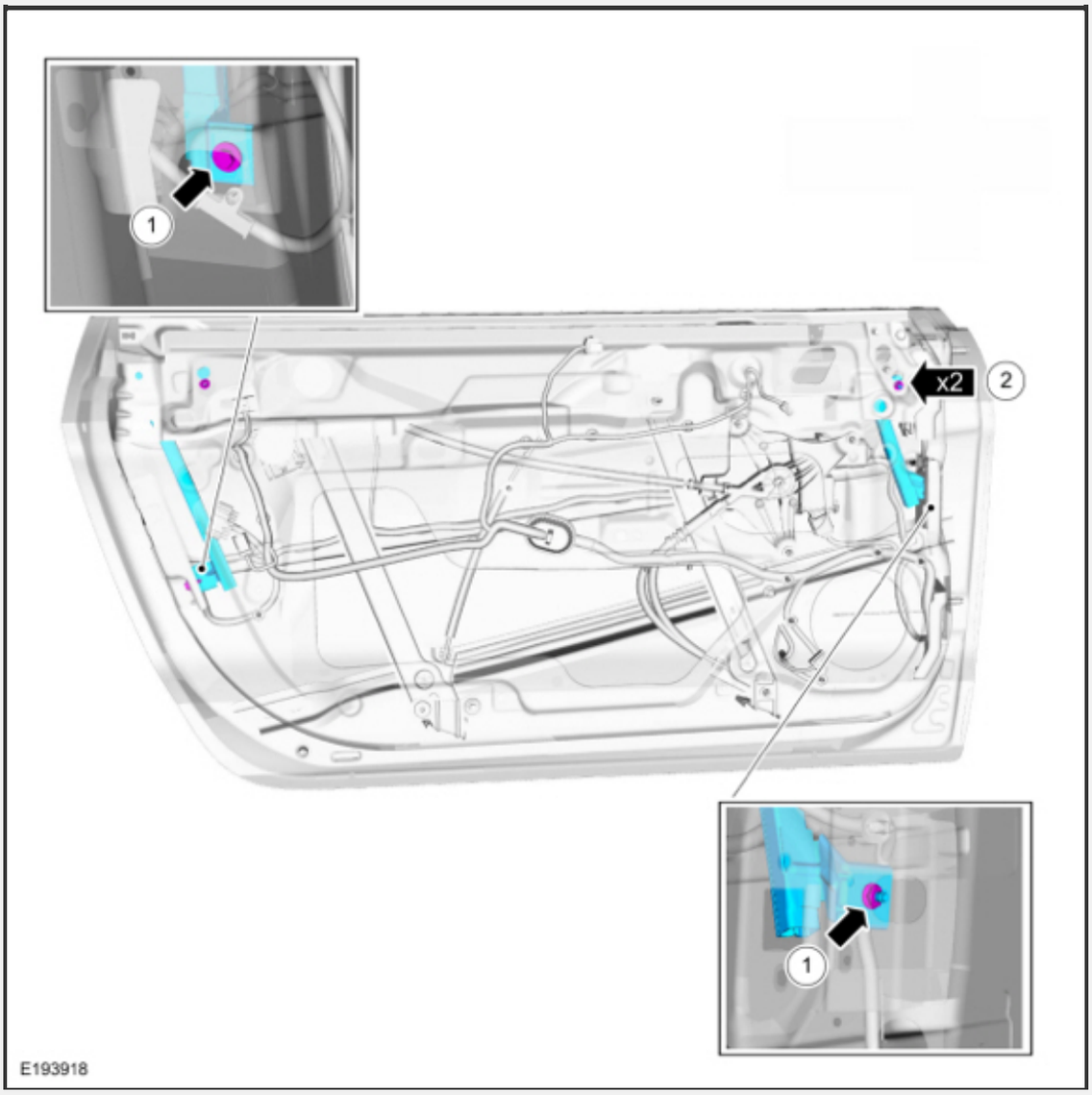

33. Raise the front door window glass to the full up position.

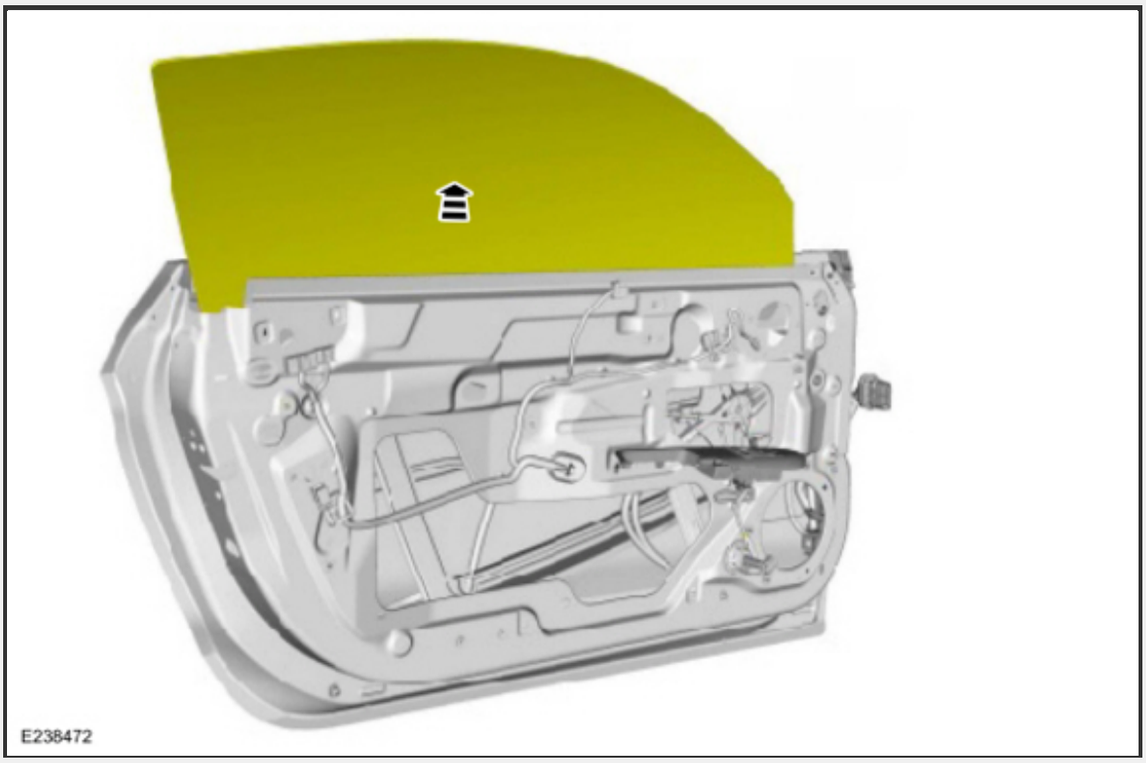

34. Close the door.

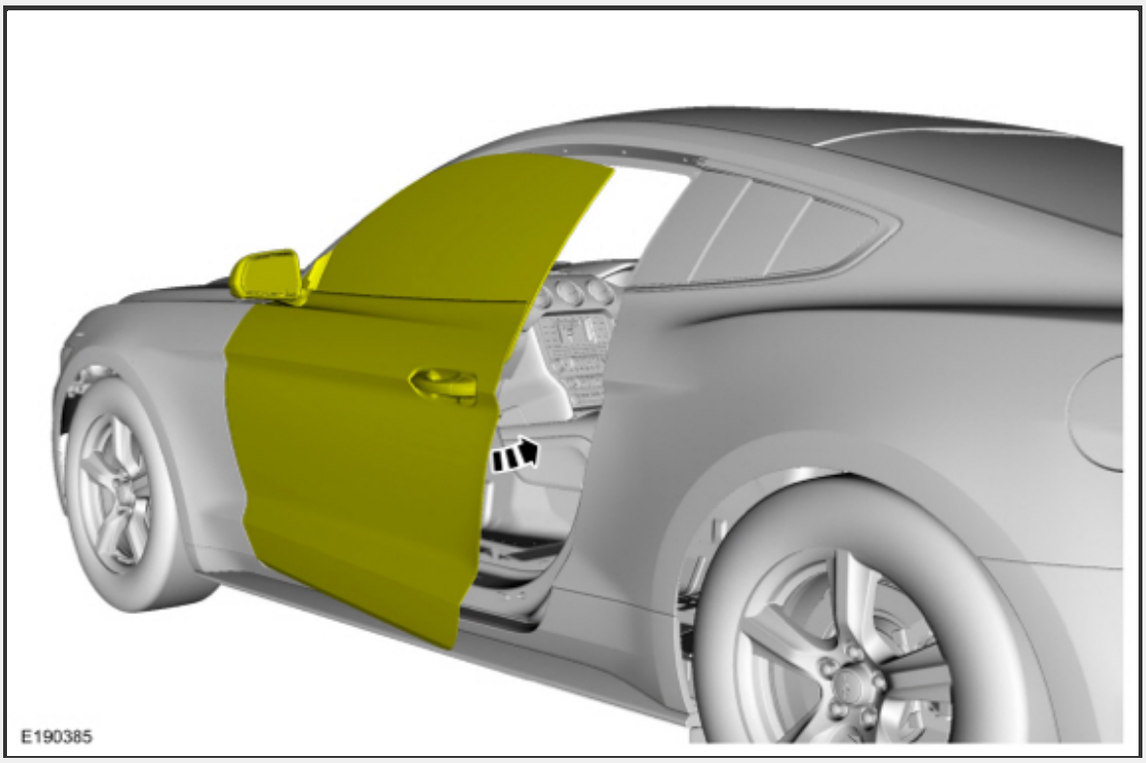

All adjustments

35. Open the door.

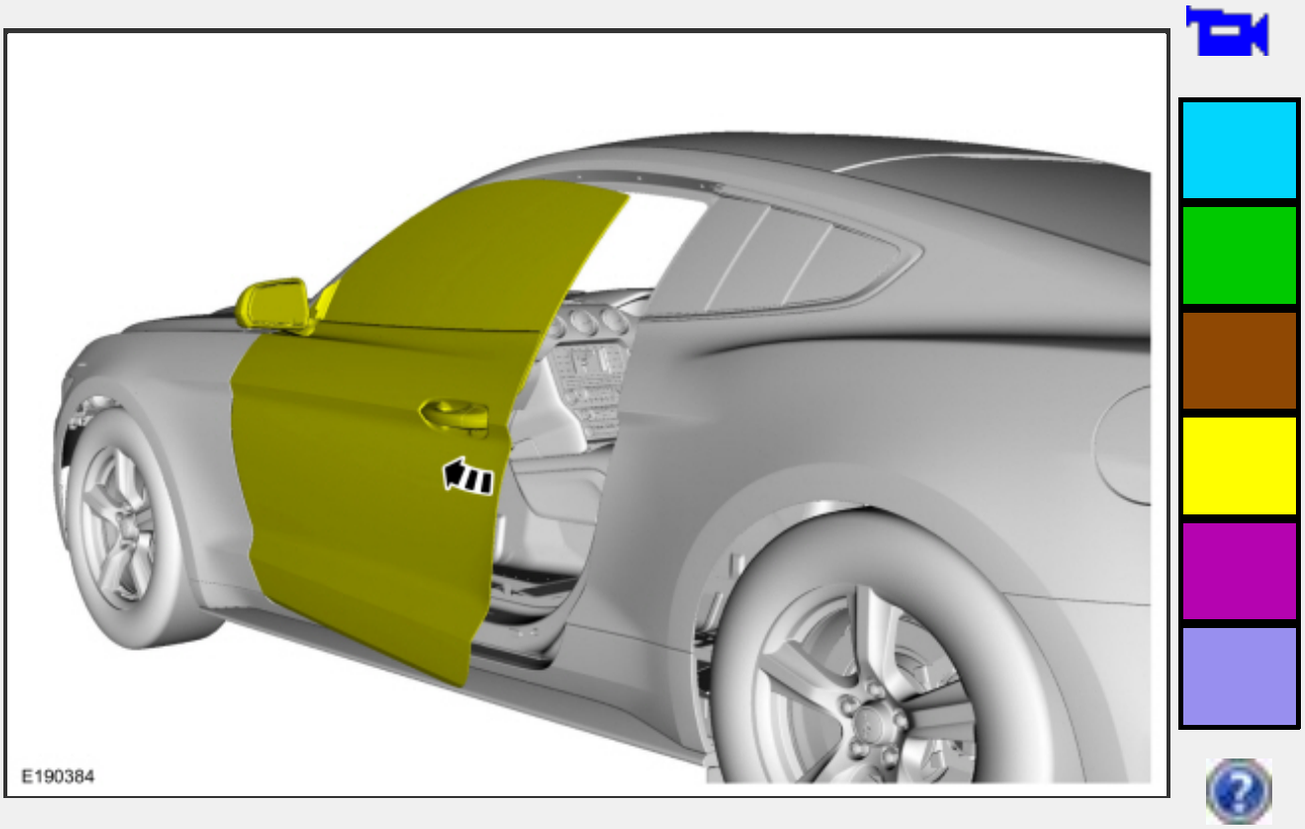

36. Recheck the front door window glass up/down, fore/aft to body dimensions at the specified locations. Measure the distance of the tape at both locations to the top edge of the front door glass at the specified locations.
    1. Measure front door window glass at the A-pillar 245mm from the base of the outer belt moulding and record.
    2. Measure at the rear of front door window glass near the roof line 230mm forward and record.

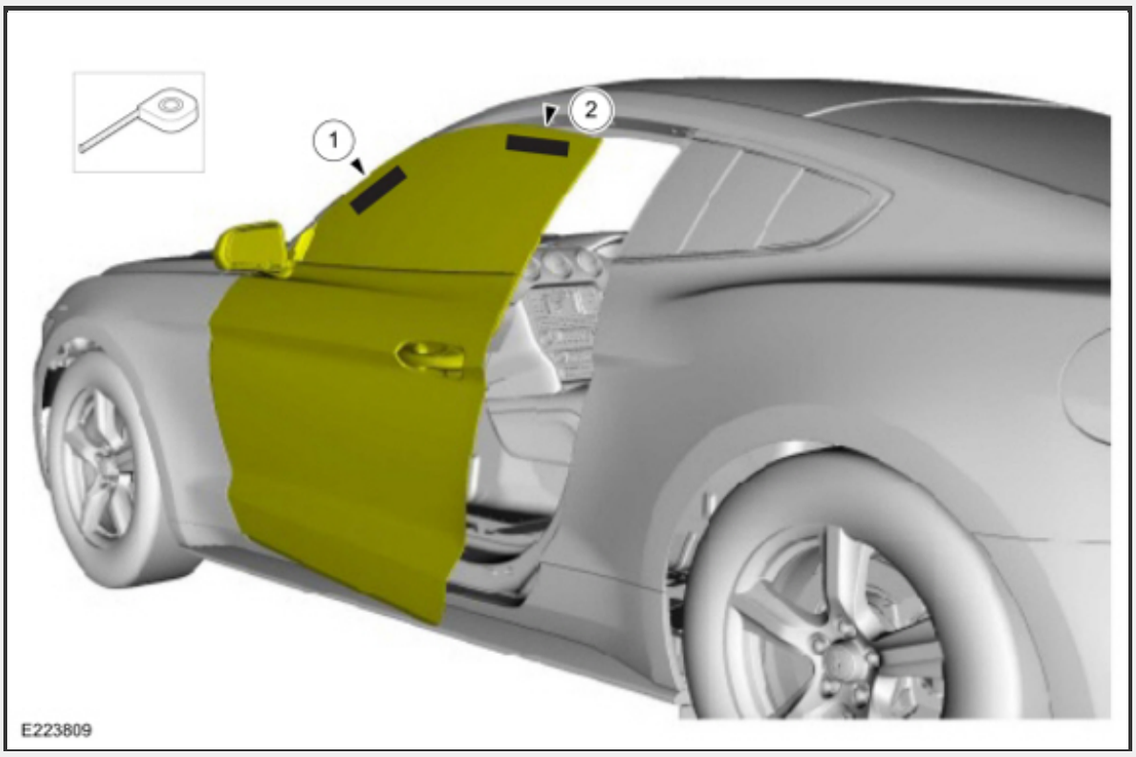

37. Close the door.

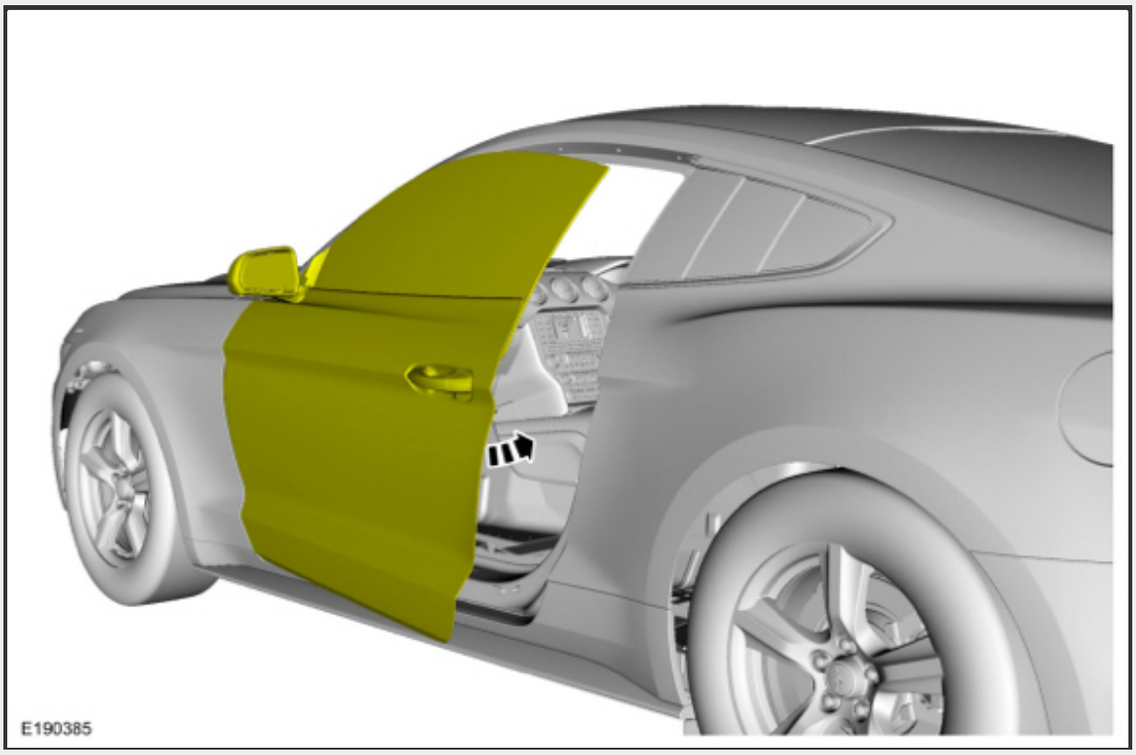

38. Measure the distance of the tape at both locations to the outer bottom edge of the seal retainer at the specified locations.
    1. Measure front door window glass at the A-

pillar 245mm from the base of the outer belt moulding and record.

2. Measure front door window glass at the rear of front door glass near the roof line 230mm forward and record.

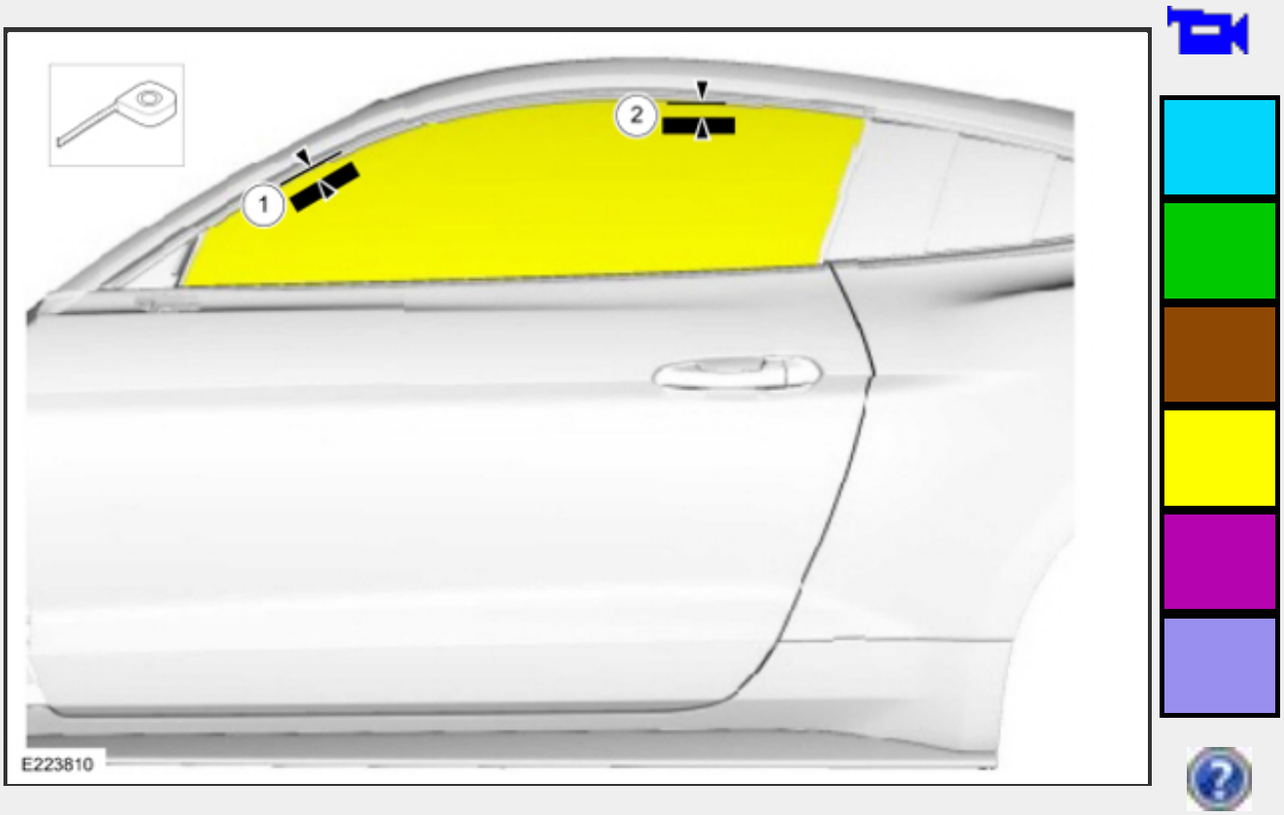

39. **NOTE:** *Repeat steps 10 through 21 until the front door window glass within specification.*

    Subtract the distance of the tape at both locations from the previously recorded measurements.

    1. Front door window glass engagement measurement range at the A-pillar 245mm from the base of the outer belt moulding range is 4mm +/-2mm.
    2. Front door window glass engagement measurement range at rear of front door glass near the roof line 230mm forward range is 8mm +/-2.5mm.

40. **NOTE:** *Repeat steps 24 through 33 until the front door window glass within specification.*

    Lower and raise the front door window glass and check the glass engagement into the weatherstrip at the specified locations.

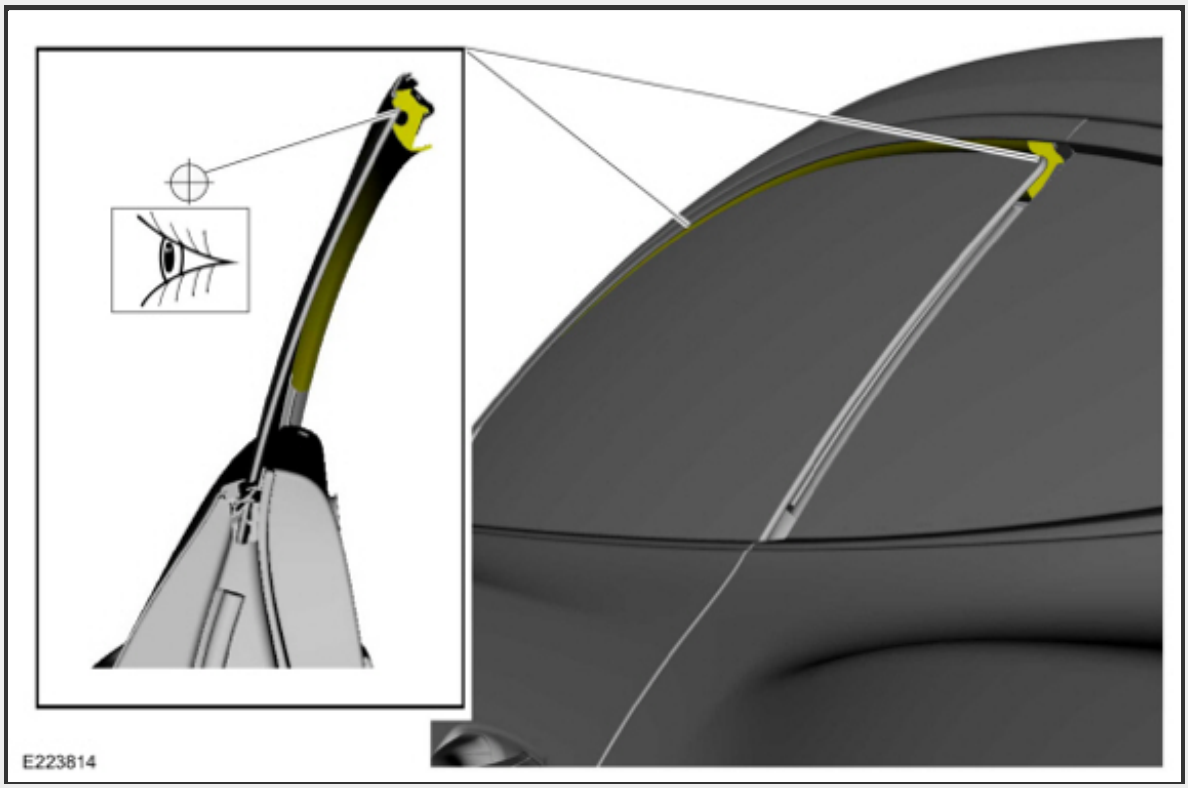

41. Remove the tape from the front door window glass.

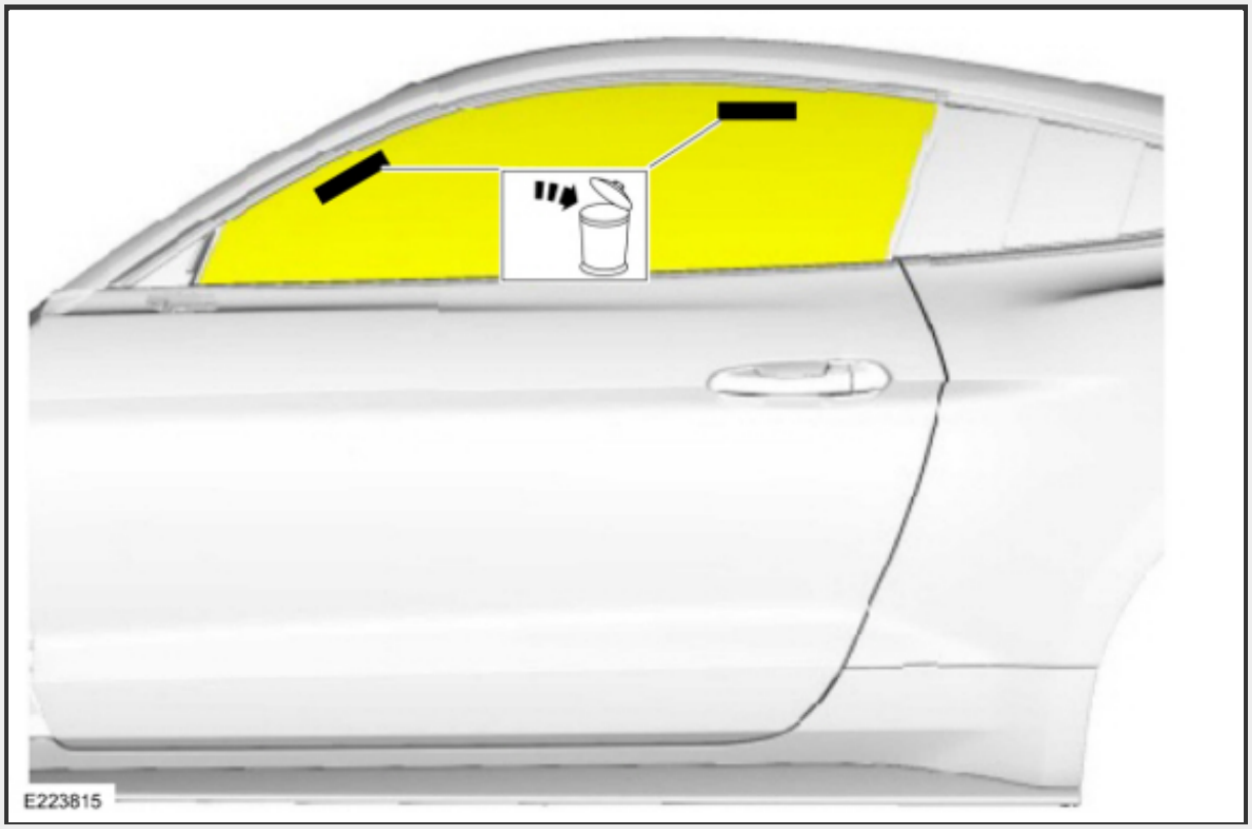

42. Install the removed components.

43. Carry out the power door window initialization. Refer to: Power Door Window Initialization (501-11 Glass, Frames and Mechanisms) .