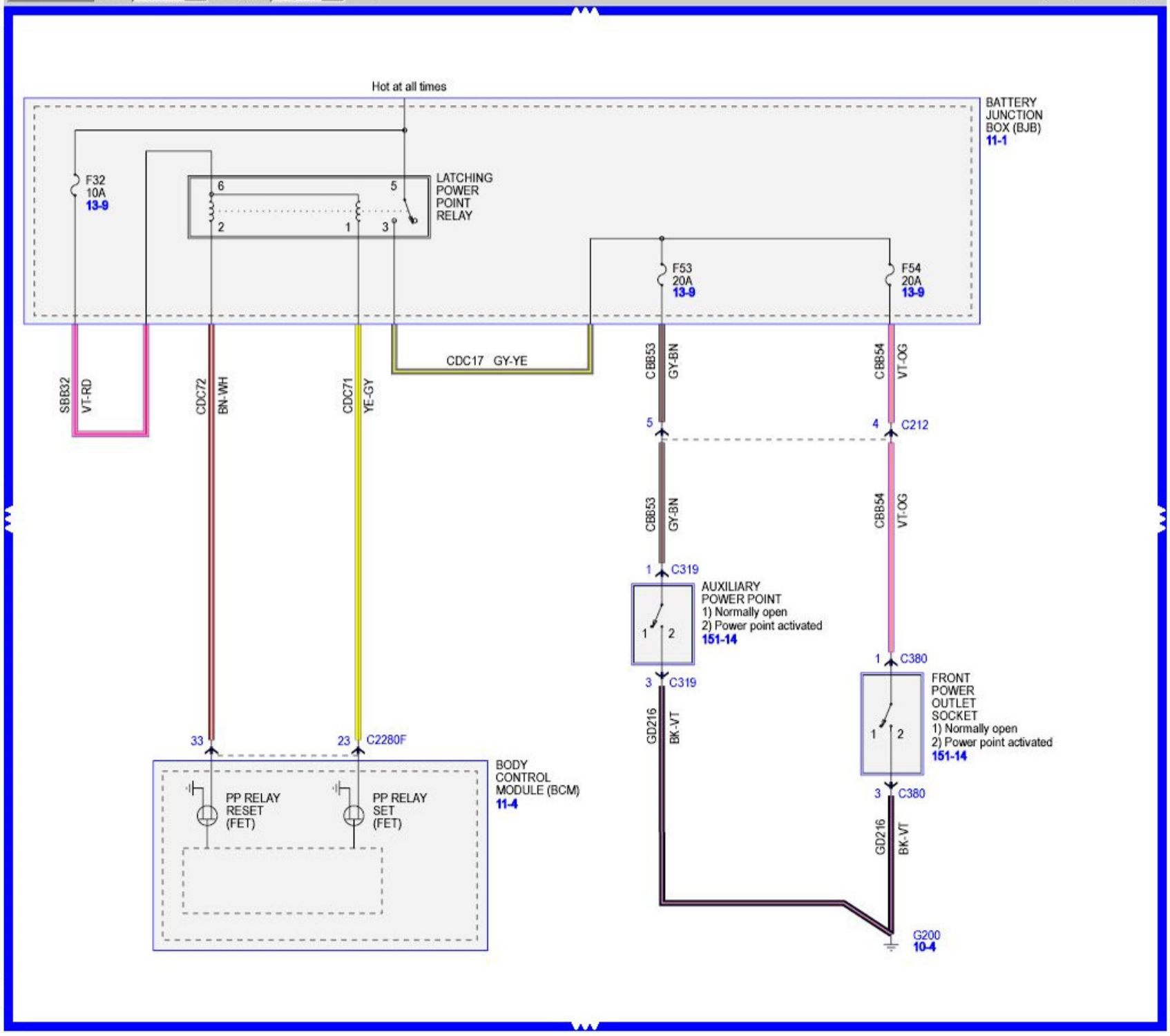
Hot at all times
BATTERY JUNCTION BOX (BJB)
11-1
F32
10A
13-9
LATCHING POWER POINT RELAY
6
5
2
1
3
F53
20A
13-9
F54
20A
13-9
SBB32
VT-RD
CDC72
BN-WH
CDC71
YE-GY
CDC17 GY-YE
CBB53
GY-BN
CBB54
VT-OG
5
4
C212
CBB53
GY-BN
CBB54
VT-OG
1
C319
AUXILIARY POWER POINT
1) Normally open
2) Power point activated
151-14
1
C380
3
C319
FRONT POWER OUTLET SOCKET
1) Normally open
2) Power point activated
151-14
GD216
BK-VT
3
C380
GD216
BK-VT
33
23
C2280F
BODY CONTROL MODULE (BCM)
11-4
PP RELAY RESET (FET)
PP RELAY SET (FET)
G200
10-4