HFS4-v3.1 wiring diagram for FORD MUSTANG ECOBOOST 2.3L 2014 on v3
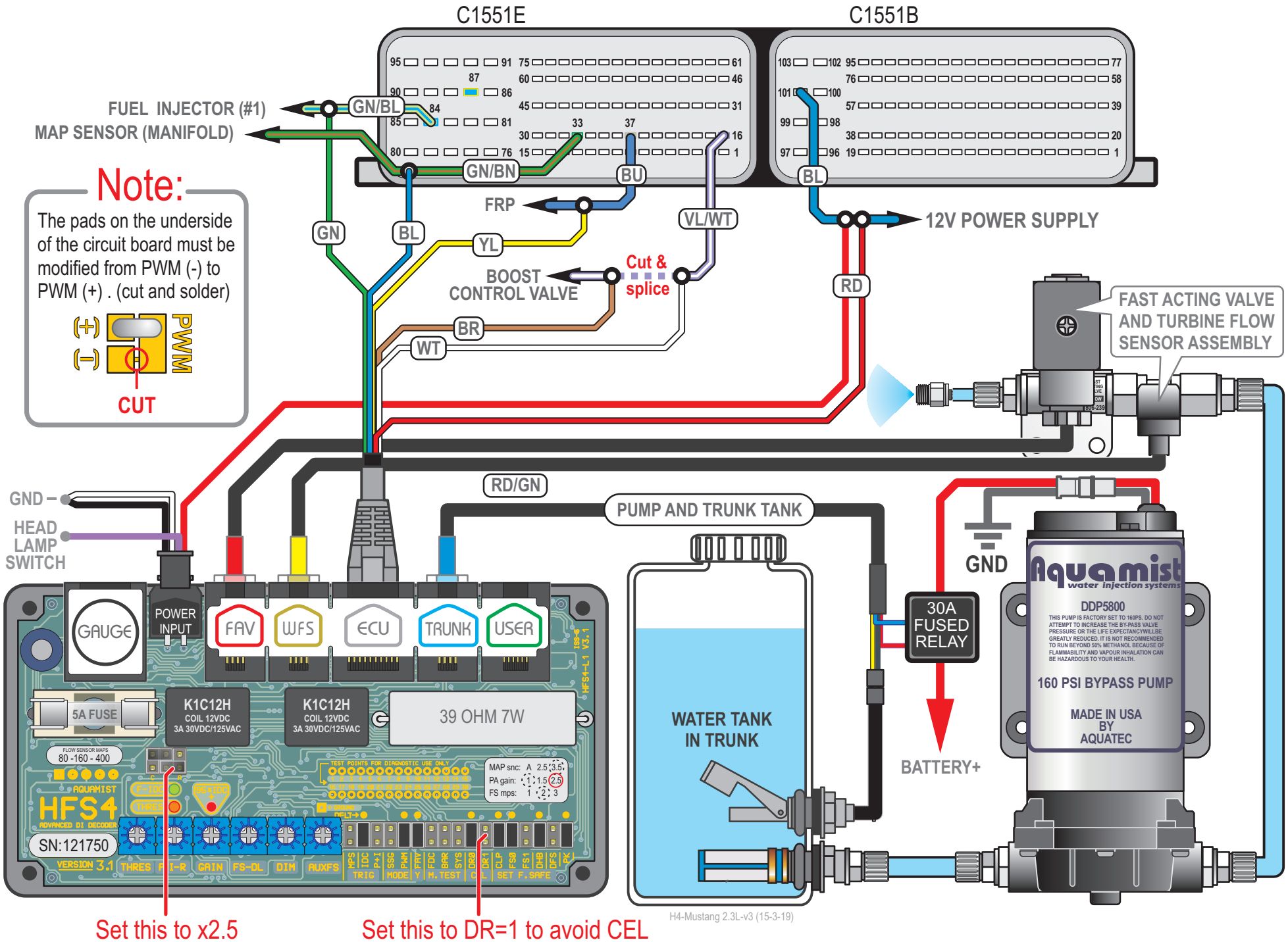
preliminary