PRODEMAND

2017 Ford Mustang 5.0L Eng VIN F GT Premium

Print Date: 25/12/2018

WARNING SYSTEMS
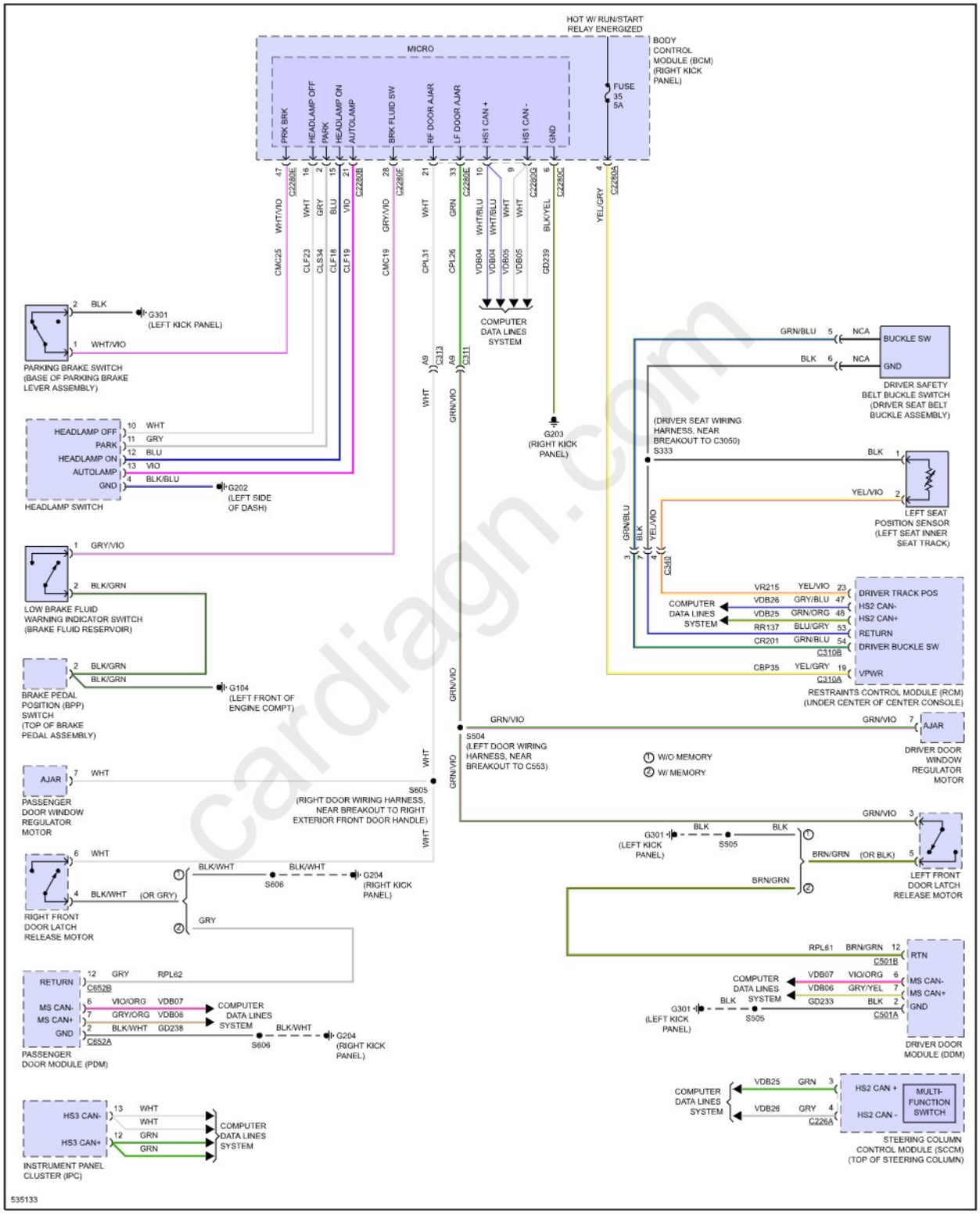
Fig 1: Chime Circuit